WAVETEK

MP MASTER
MA31822

1855/1865

SERVICE MANUAL

THIS DOCUMENT CONTAINS INFORMATION PROPRIETARY TO WAVETEK. THE INFORMATION IN THIS DOCUMENT IS NOT TO BE USED OR DUPLICATED IN ANY MANNER WITHOUT THE PRIOR APPROVAL IN WRITING OF WAVETEK

WAVETEK
5808 CHURCHMAN, P.O. BOX 190
BEECH GROVE, IN 46107
317-787-3332
(TOLL FREE OUTSIDE INDIANA)
1-800-428-4424

Rev. F 4/87

INTRODUCTION

The 1855/1865 Sweep Recovery System was designed specifically for broad band cable system sweeping. The microprocessor control provides the user with the capability to program a wide variety of sweep parameters. In addition, digital processing of sweep and TV signal information provides an extremely accurate representation of the frequency response. The result of this use of state of the art technology is sophisticated test equipment that provides quick and easy measurements.

This manual supplies detailed theory of operation, calibration procedures, parts lists, and schematics. It is intended to be used by technically trained personnel for calibration and fault diagnosis.

CONTENTS

			PAGE
SECTION	1.	1855/1865 THEORY OF OPERATION	1-1
	1.1	Model 1855 Transmitter	1-1
	1.2	Model 1865 Sweep Analyzer	1-2
	1.2.1	AVG Mode	1-5
	1.3	Model 1855 Transmitter Individual Assemblies	1-6
	1.3.1	Front Panel Board	1-6
	1.3.2	Microprocessor Card	1-6
	1.3.3	Latch Card	1-8
	1.3.4	Ramp Card	1-8
	1.3.5	M9L-1 Oscillator-Mixer	1-10
	1.3.6	M135 PSK Modulator	1-12
	1.3.7	M138 Loop Counter	1-12
	1.3.8	DPS10 Power Supply	1-12
	1.3.9	M113 Selective Blanking Option	1-13
	1.4	1865 Receiver Individual Assemblies	1-14
	1.4.1	M117 Amplifier/Programmable Attenuator	1-14
	1.4.2	M118 Differential Biased Detector	1-14
	1.4.3	M119 PSK Detector	1-15
	1.4.4	Model 1865 Vertical/Horizontal Timing Card	1-16
	1.4.5	Control Register Card	1-21
	1.4.6	1865 Microprocessor Card	1-22
	1.4.7	Model 1865 A-D Data Memory Card	1-23
	1.4.8	CRT	1-26
	1.4.9	Power Supplies	1-26
SECTION	2.	1855 Calibration Procedure	2-1
	2.1	Preparation	2-1
	2.1.1	Power Supply Voltages	2-1
	2.1.2	Diagnostic Test Mode	2-1
	2.1.3	Output Level Calibration	2-3
	2.1.4	Horizontal Output	2-3
	2.1.5	Harmonic Output	2-3
	2.1.6	1855 Dip Shunt Calibration Procedure	2-4

CONTENTS

			PAGE
SECTION	3.	1865 Calibration Procedure	3-1
	3.1	Preparation	3-1
	3.1.1	Power Supply Adjustments	3-1
	3.1.2	Low Battery Adjustments	3-3
	3.1.3	CRT	3-3
	3.1.4	M119	3-3
	3.1.5	Frequency Adjustment	3-4
	3.1.6	Gain Adjustment	3-4
	3.1.7	Timing Adjustments	3-4
SECTION	4.	Trouble Shooting	4-1
SECTION	5.	Parts Lists 1855B	5-1
SECTION	6.	Parts Lists 1865B	6-1
SECTION	7.	Optional Equipment Parts List	7-1
SECTION	8.	Schematic List & Drawings	

SECTION I

1855/1865 THEORY OF OPERATION

This section sets forth general and specific information on the principles of operation of the Models 1855/1865 Sweep Recovery System. Reference to the schematic section will facilitate understanding of the detailed individual assembly sections of this chapter.

1.1 Model 1855 Transmitter

At power-on, default values of sweep parameters are copied from read-only memory into the random-access memory of the 6802 microprocessor. The microprocessor sends the parameters byte by byte to the Latch Card, which makes them available in parallel to the digital-to-analog converters on the Ramp Card.

The Ramp Card provides voltages for the M9L-1 Sweep Oscillator. The microprocessor sends sweep parameters (start frequency, sweep width, sweep time, and repetition interval, plus parity and checksum) in serial ASCII to the M135 Phase-Shift Keying Modulator, which generates and phase-modulates the 50MHz pilot carrier. The information is made available simultaneously as TTL levels at the TTL output jack on the rear panel of the Model 1855.

After sweep parameters are transmitted, the Model 1855 transmits on the pilot carrier two 100 µsec pulses, designated "pass one" and "pass two", separated by an interval equal to one TV frame (33.3667 msec ±1 µsec for U.S. standards). The RF sweep is activated by the pass-two pulse.

Before the sweep, the start frequency, counted down by M138, is referred to an IC counter on the Microprocessor Card. After the sweep, the stop frequency is counted. The frequency counts are compared to the stored parameter values for F-1 and F-2; frequency and span are corrected as necessary.

The sequence consisting of parameter transmission, pass-one pulse, pass-two pulse, counting, sweep, and counting is repeated at intervals set by the value of the REP/SEC parameter.

Between sweeps the microprocessor scans the keyboard. When a numeric key is pressed, the microprocessor checks a "numeric entry" flag. If the flag is not set, the microprocessor sets the flag, clears the display (turning off parameter identification and units lights), and puts the new digit into the display. If the flag was already set, the microprocessor shifts the number in the display left one place and adds the new digit. If there are three digits to the left or one to the right of the decimal point, numeric keys are ignored.

When a parameter key is pressed, the microprocessor again checks the numeric-entry flag. If it is set, the number in the display is checked against the validity limits. If the number passes, it is stored as the new value of the parameter. If not, the microprocessor flashes the display briefly and then displays the current value of the parameter. In either case parameter identification and unit lights are turned on. If the flag is not set, the current value of the parameter is displayed.

If the flag is set when the CLEAR ENTRY key is pressed, the flag is cleared and the display reverts to its condition before the numeric entry. If the flag is not set, the CLEAR ENTRY key has no effect.

Pressing the CATV/CS key toggles the mode. In Continuous Sweep (CS) mode the interval between the end of one sweep and the beginning of the next is 1 msec. After a time specified by the value of REP/Sec, the unit pauses 50 msec to count then correct start and span frequencies. IF F-1 and F-2 are equal, the unit is put into CW mode. The frequency is counted and corrected at intervals specified by REP/SEC.

1.2 Model 1865 Sweep Analyzer

The 50MHz pilot carrier from the Model 1855 Transmitter is demodulated by the M119 Phase-Shift Keying Detector. The 1802 microprocessor stores the sweep parameters.

When the pass-one pulse is received, the Model 1865 activates "HOLD" in the M118 Biased Detector. The analog-to-digital converter begins to convert voltage levels into eight-bit binary numbers, with a range of 0-255 decimal

(256 possible values). The A/D converter is clocked at a rate such that 250 measurements will be made during the sweep.

Successive numbers are stored in consecutive locations of the main display memory. Pass one consists only of the video on the line.

As pass two, video plus sweep, is being received, the numbers in display memory are retrieved at the sampling rate and converted to an analog voltage. This voltage is subtracted from the pass two voltage. The difference is digitized and replaces the pass one voltages in the display memory. The result, to the extent that the video is the same on pass one and pass two, is that the display memory contains only the system response to the sweep frequencies.

After pass two is received the microprocessor inhibits Power Supply boards 2, 3, and 4, removing power from circuits not needed. After a time nearly equal to REP/SEC, the power supplies are disinhibited, readying the circuits for the next sweep.

Between sweeps the microprocessor scans the keyboard and refreshes the display. When the keyboard is found to be indicating a key pressed, the microprocessor identifies the key and after a debouncing confirmation takes appropriate action. Identification of the closed key is skipped as long as any key remains closed. Thus the sequence "hold ↑, hold ↓, and release ↑" will result in the cursor continuing to move upward, since the microprocessor will not check the identity of the closed key until it has found all keys open.

Raster scan of the CRT is bottom-to-top and left-to-right. At horizontal retrace, the beginning of a new refresh, a counter is zeroed. This counter is incremented at each vertical retrace, counting the vertical lines. As an upward scan approaches the baseline of the display, after painting a column of dots in the alphanumeric readout, the line counter is used as a pointer to the display memory. The number in memory (the digital representation of a sample from the M118 Biased Detector) initializes a counter. As the scan crosses the baseline, the beam is turned on and the counter begins to be decremented at a rate such that there are 256 counts by the time the scan reaches a point near the top of the screen. When the counter reaches zero, the beam is turned off. The result is a line whose height is proportional to the detected voltage. As the scan proceeds horizontally, it displays all the 250 sample points.

Cursors are generated in the same way as data display. Each cursor is defined by a position (a number from 0 to 255), and a mode. When ↑ or ↓ is pressed, the microprocessor increases or decreases the value of the position of the active cursor. If a cursor is in LEVEL mode its value initializes one of two cursor counters when the scan crosses the baseline. The counter is decremented at the same rate as the counter containing the sample voltage. When the count reaches zero, the intensity of the beam is enhanced for one dot time. This repeats with each vertical scan resulting in a horizontal row of dots.

For a cursor in FREQ mode the cursor counter is initialized at horizontal retrace and decremented at vertical retrace. When the counter reaches zero, the beam intensity is enhanced for a full vertical scan. The result is a line whose position on the display corresponds to the position of one of the sweep samples.

Graticule lines are generated by discrete logic clocked at the same rates as the counters for data and cursors.

Alphanumeric information is calculated from cursor positions and numbers in display memory. For a cursor in LEVEL mode, the microprocessor uses the cursor position to consult a table containing a piecewise-linear approximation to a logarithmic curve. If the cursor position does not correspond to one of the points in the table, the microprocessor interpolates between points. The microprocessor reads the setting of the ATTENUATION controls before each refresh and adds the value to the result of the table lookup. The result is the absolute line level, in dBmV, of a point at cursor height on the display.

The frequency to which a cursor in FREQ mode corresponds is calculated from

$$F = F\text{-}1 + N(S/250)$$

where F-1 is the start frequency, N the cursor position, and S the sweep width. S/250 is the amount by which the sweep frequency increases from one sample time to the next. The number in memory location N is run through the level calculation, yielding the level of the actual response at frequency F. The use of digital information for display generation and alphanumeric calculation ensures that optical distortions in the CRT give no effect on analysis of the display.

1.2.1 AVG Mode

The AVG function is an exponential smoothing operation, replacing a portion of the moving average with the same portion of the most recent input. The calculation operates on each sample value in B (auxiliary) memory, replacing the value with a value equal to 0.75B + 0.25A where B is the value in B memory (from the previous average) and A is the value in A memory (from the most recent sweep).

As a numerical example, suppose that the sample voltage at a particular frequency has been 25mV for some time. When AVG is pressed, the A memory is copied to the B memory. As long as the sample voltage at the frequency does not change, the averaging is:

$$0.75B + 0.25A = 0.75\ (25) + 0.25\ (25) = 18.75 + 6.25 = 25$$

and the average does not change.

If the sample voltage at the frequency jumps to 28mV, the average begins to follow the change.

After the first sweep following the increase, the updating is:

$$0.75\ (25) + 0.25\ (28) = 18.75 + 7.00 = 25.75$$

After the next sweep the average becomes:

$$0.75\ (25.75) + 0.25\ (28) = 19.31 + 7.00 = 26.31$$

By the tenth sweep after the increase the average has risen to 27.83mV. (See Figure 4-2.) If on the eleventh sweep the sample voltage returns to 25mV, the averaging is:

$$0.75\ (27.83) + 0.25\ (25) = 20.87 + 6.25 = 27.12$$

On the twelfth sweep:

$$0.75\ (27.12) + 0.25\ (25) = 20.34 + 6.25 = 26.59$$

By the twentieth sweep after the original increase the average is down to 25.16mV.

1.3 Model 1855 Transmitter Individual Assemblies

1.3.1 Front Panel Board

The front panel board contains the keyboard and LED displays. The keyboard consists of Hall-effect switches, each of which contains an IC to achieve bounceless levels. When the microprocessor wants to scan the keyboard, it lowers P101 pin 9, KEYS, enabling IC107 to pass address levels via closed keys to the data bus.

DS101 through DS104 are seven-segment LED's, which are driven by decoder/driver/latches IC103 through IC106 respectively. Latches are loaded in pairs; the microprocessor puts two four-bit bytes on the data bus, and lowers P101 pin 7, DISPØ, to load them into IC103 and IC104, or P101 pin 8, DISP1, to load IC105 and IC106.

Parameter indicators CR103 through CR115 are lit by Q101 through Q109, driven by bits from hex D flip-flops IC101 and IC102. LATCHØ loads IC102 loads IC102; LATCH1 loads IC101. Both "F-1" and "F-2" light "MHz" via CR101 or CR102.
Q110 lights the decimal point.

1.3.2 Microprocessor Card

The Microprocessor Card contains the microprocessor, read-only memory (ROM), support, and interface circuitry.

The microprocessor, IC201, is a 6802. X201 is the 4MHz crystal. The E output, IC201 pin 7, is a 1MHz system clock. J203 brings the E output to the bus if it is needed for an option. (J203 should not be installed if it is not required.)

The 6802 contains 126 bytes of random-access memory (RAM) on the chip; 32 of these retain data when main power is removed, if +5V is applied to pin 35. These locations are used in the Model 1855 to hold sweep parameters. The optional M152 Battery Backup supplies the holding voltage. DIP JUMPER 204 may be replaced with a plug wired to manipulate the data bus for test purposes.

IC203 and IC204 are one of eight decoders. A combination of bits on selector pins 1, 2, and 3, in conjunction with the VMA (Valid Memory Address) signal and clock pulse E from the microprocessor, causes one of the output pins to go low, enabling the corresponding IC to interact with the microprocessor.

ROM 0 and ROM 1 contain the program.

IC207 is a Programmable Timing Module (PTM), containing registers which may be used to count frequencies, or, by counting system clock pulses, to produce time intervals. The PTM counts the output of the M138 Counter and reports the results to the microprocessor; it provides pulses for the Serial Data Out to the M135 PSK Modulator; and it times the sweep repetition interval.

IC208 is an inverting input buffer. When it is enabled, the factory-set wiring of DIP JUMPER 206 gives to the microprocessor a correction factor for the frequency of X201. This results in more stable operation than pulling crystal frequency with a trimmer capacitor.

IC213 and IC214 are three-start buffers for address lines. IC212 is a bi-directional, three-state buffer for the data bus. IC212 through IC214 are enabled when all the lines on IC110 are high.

IC209 with associated circuitry is a power-on reset and power-failure monitor. At power on while the +9V unregulated is below the voltage necessary for +5V regulator IC211, IC209A pin 1 is low. Q202 conducts, holding IC209 pin 5 and RESET low. When the +9V reaches the threshold, A202 is cut off, allowing C212 to charge through R220. After about 0.1 seconds RESET goes high, allowing the microprocessor to proceed.

If the optional M152 Battery Backup is installed and turned on when the +9 falls below the threshold, Q202 is turned on, discharging C212 and bring RESET low immediately. C210 and C211 keep the main +5V up long enough to allow the microprocessor to power down gracefully. A fully-charged M152 will keep the sweep parameters in RAM for about 24 hours.

When the +9V again exceeds the threshold, Q202 again holds RESET low for 0.2 seconds. When RESET is released, the microprocessor calculates a checksum from the sweep parameters in its RAM. It compares this with the RAM checksum that is calculated when a parameter is changed. If the two checksums do not agree, the microprocessor loads the default parameters from ROM.

1.3.3 Latch Card

The Latch Card takes data from the Microprocessor Card and makes them available to the Ramp Card.

Address lines from the microprocessor, in conjunction with enable line E8, select one of the latches IC402 - IC408 to hold the byte from the data bus.

When the microprocessor has signaled RAMP DOWN in Continuous Sweep mode, ZERO from the Ramp Card produces RESET and brings RAMP high. (See Section 1.3.4, Ramp Card, for the use of these signals.)

1.3.4 Ramp Card

The Ramp Card contains digital-to-analog converters (DACs) which convert digital information from the Latch Card to analog voltages which control the sweep.

Start frequency is determined by the digital settings of IC513 and IC514. These are programmable current sources; currents are converted to voltages by IC515 and IC516. The two voltages are summed by IC519. The ratios of input and feedback resistances of IC515, IC516, and IC519 are such that the voltage change at IC519 pin 6 due to an increment of current from IC513 is 64 times as great as the change due to the same increment from IC514. Thus each of the 256 steps from IC513 can be divided into 64 parts by adding steps from IC514. The result is that the voltage range is divided into 256 x 64 = 16,284 increments, equivalent to a 14-bit DAC. Dividing the nominal 400MHz frequency range by this value gives 24.4 kHz per increment; the actual frequency range is adjusted so that each increment of current steps the frequency 25kHz.

Sweep time is determined by IC501. The voltage from IC503 is integrated by C505, producing a ramp that rises from 0 to 10V in a time determined by the magnitude of the current. The output of IC501 is logarithmically related to the binary input, to compensate for the non-linear relationship between the magnitude of the current and the charging time of C505.

IC504 and IC505 determine frequency span. These DACs are linked in the same manner as IC513 and IC514. The ramp output of IC503 is the reference for IC504 and IC505; the output of IC507 is the ramp voltage multiplied by the binary fraction on the input pins of the DACs. In other words, the DACs divide the reference into 16,384 increments, and output as many increments as the binary programming needs. The reference is a ramp from 0 to 10V; the output is a ramp from zero to some lower voltage.

The ramp voltage is added to the start voltage in IC519. The resulting ramp causes the M9L-1 Sweep Oscillator to sweep from the start frequency to the start frequency plus the span.

Assume that a voltage of 0V on the sweep oscillator produces a frequency of 0MHz, and that 10V produces 400MHz. Then sweeping from 50 to 250MHz requires a voltage sweep from 1.25V to 6.25V. The START DAC outputs current to produce 1.25V; the SPAN DAC divides the 0-10V ramp to 0-5.0V. The sum of the two outputs is a ramp from 1.25-6.25V.

At the end of each sweep the microprocessor brings RESET high. (This is not the same as RESET on the microprocessor card.) The analog switch between IC502 pins 2 and 3 opens and C505 holds its voltage while the stop frequency is counted.

At the end of the sweep in CATV mode, the microprocessor raises the BLANKING line via IC404 pin 11 of the latch card cutting off the sweep output. RAMP is asserted, closing the analog switch between IC502 pins 6 and 7. C505 discharges, ready for the next sweep. In Continuous Sweep (CS) mode the microprocessor signals RAMP DOWN rather than RAMP at the end of the sweep, closing the switch between IC502 pins 14 and 15. This puts a negative voltage on IC503 pin 6 causing C505 to discharge in 1 msec. The frequency ramps down to the start, producing a baseline for an oscilloscope display.

When the ramp voltage falls below the 0.15V, established by R527 and R530, ZERO goes low, causing IC410 on the latch card to send RAMP low, discharging C505. This prevents the sweep voltage from going negative.

In CW mode the RAMP is low, closing IC502 pins 6 and 7. No integrating occurs, so there is no ramp, and the output frequency remains constant. IC511 and IC512A provide a voltage which biases PIN diode attenuators in various modules to provide the proper output level.

IC512B adds a small amount of sweep voltage, variable by the TILT control, to the LEVEL program to change the amplitude as frequency changes.

1.3.5 M9L-1 Oscillator-Mixer

The M9L-1 produces the RF sweep output. The module contains two UHF oscillators sweeping in opposite directions. The difference between their frequencies is the output.

The oscillator formed by Q2 sweeps from 1550 to 1750MHz. The bias on the anodes of voltage-variable capacitance diodes CR1, CR2, and CR3 is adjusted by R3 to achieve proper calibration. The sweep voltage from the ramp card is applied to the cathodes of the diodes. The diodes associated with Q10 are reversed, and the polarity of the bias voltage is opposite, so the sweep is from 1550 down to 1350MHz.

The sweeps are combined in a single-balanced diode mixer composed of L4, L11, CR4, and CR5. The difference frequency, 1 to 400MHz, is amplified by Q3, Q5, and Q6.

This double-acting sweep allows greater frequency range, and achieves partial cancellation of nonlinearities in the frequency-versus-voltage characteristics of the oscillators. R9 maximizes this cancellation by varying the drive ratio between the two oscillators.

In CW mode, a voltage is applied to pin 7 of the module, turning Q14 on and connecting C34 and L13 to ground as a series filter on the DC control line.

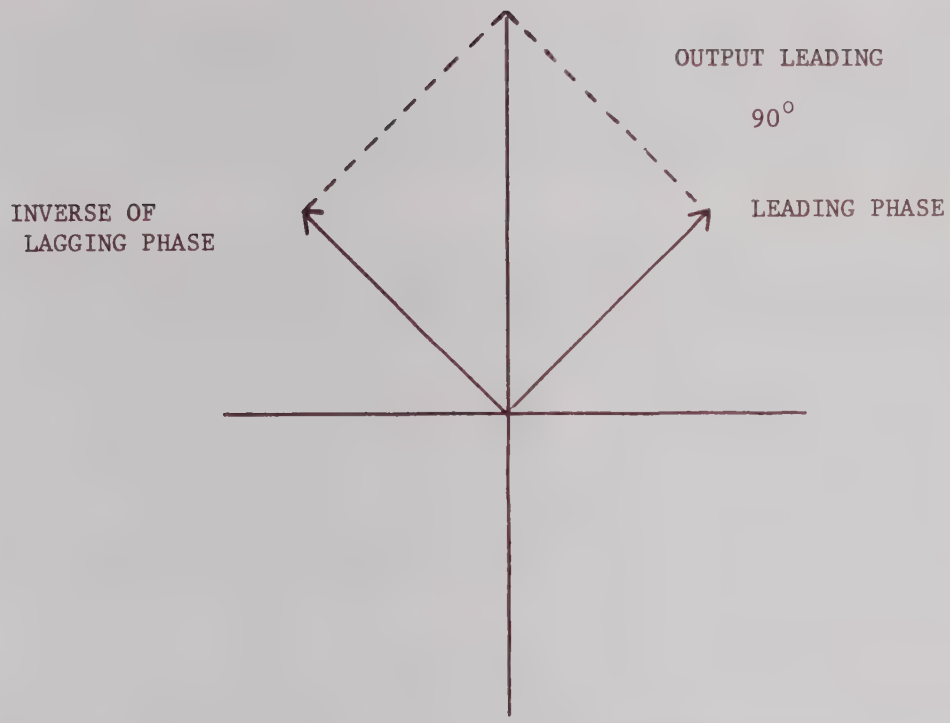

Figure 1-1. M135 OUTPUT LEADING REFERENCE 90°

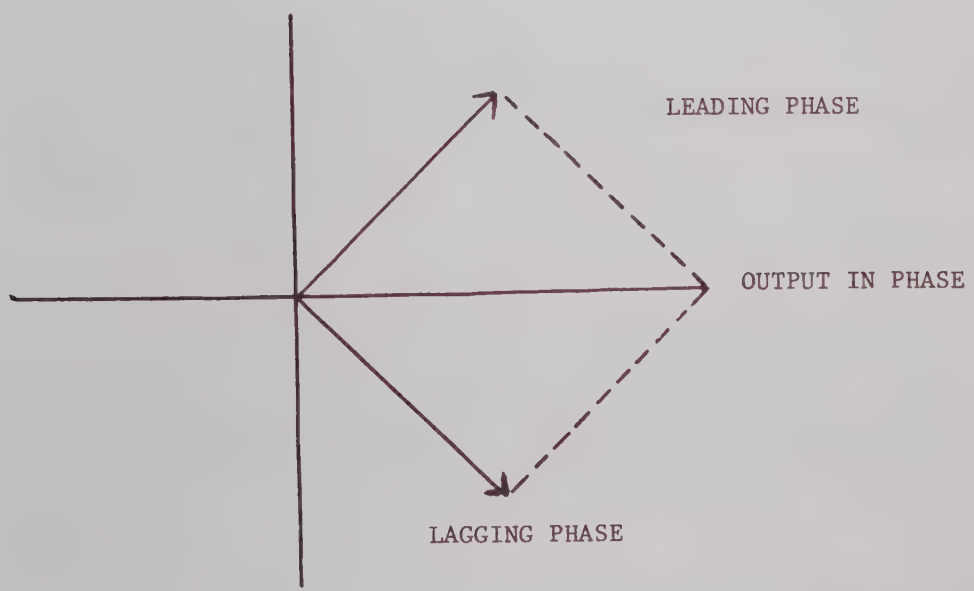

Figure 1-2. M135 OUTPUT IN PHASE WITH REFERENCE

1.3.6 M135 PSK Modulator

The M135 generates the 50MHz pilot carrier and shifts its phase 90° when so ordered by serial data from the microprocessor board.

Q5 and X1 generate the 50MHz carrier. One output of hybrid splitter T1 goes to a low-pass filter, L10 and C26; the other output goes to a high-pass filter, C14 and L13.

The output of the mixer is linearly combined with the leading phase from the low-pass filter. When the TTL level is high, the lagging phase is combined with the leading phase, giving a signal that is in phase with the reference; when the TTL level is low, the inverse of the lagging phase is used, resulting in an output that leads the reference by 90°.

Figures 4-1 and 4-2 show vector diagrams for this process. The phase-modulated signal is amplified by Q6. Level control is provided by IC1. A sample of the signal is rectified by CR2 and CR3, and compared with the level voltage from the analog card. The difference voltage produces a current which biases PIN diodes CR4 and CR5, providing proper attenuation for the signal.

1.3.7 M138 Loop Counter

The M138 divides the sweep frequency by 160, passing the output to the programmable timing module (PTM) on the microprocessor card.

The RF input is clamped by forward-biased diode bridge CR1 through CR4. IC2 is an ECL prescaler, dividing by 10. IC3 divides by 16.

1.3.8 DPS10 Power Supply

S1 is the rear-panel line voltage switch, connecting the primaries of T1 in parallel for 115 VAC or in series for 230 VAC.

The ±18V supplies are regulated by power Darlingtons Q3 and Q4. IC1 provides the reference for the +18 supply.

If the output voltages starts to drop, the voltage at IC2 pin 2 falls. The difference between IC2 pins 3 and 2 increases, so the output of IC2 increases. More current flows into the base of Q3, turning it on harder and decreasing the voltage drop. Q1 supplies current limiting.

The -18V supply is referenced to ground; the feedback circuitry attempts to keep the wiper of R8 at zero volts. This allows the two supplies to track with temperature.

The +9V unregulated is taken from P1 pins 3 and 4. The +9V supply from P1 pins 1 and 2 are used only if options are installed which require unusual amounts of current. P2 pin 5 is connected to P2 pin 7 in order to take advantage of the filtering available from C10.

CAUTION

When the unit is shipped, one of the blue wires from power transformer T1 is connected to J1 pin 9, as shown on the schematic. P1 has only seven pins, so this wire floats. The wire should not be moved to J1 pin 1 unless the factory so advises. If the extra current is not needed, the increased voltage from the 9V supply might cause the Model 1855 to overheat.

1.3.9 M113 Selective Blanking Option

The inverted combined program at module pin 2 is the sum of the offset and ramp voltages from the ramp card. It sweeps from +10V to -10V, and is biased at the junction of R2 and R3 by the voltage from R4. When the biased sweep voltage is above the 9V reference at IC1A pin 5 (from the junction of R5 and R6) the output of IC1A is low. The output of IC1B is high. Q1 is off, so Q3 is off, and the blanking voltage at module pin 3 is zero. As the sweep voltage (biased by R4) falls, the output frequency rises; when the sweep voltage falls below the level set by R5/R6, the output of the IC1A goes positive, turning Q1 on. Q3 turns on, and module pin 3 goes to about +17V. Thus, R4 sets the lower edge of the blanking interval.

When the biased sweep voltage reaches the level set by R8, the output of IC1B goes low, turning Q1 and Q3 off, returning the blanking voltage to zero.

The operation of the second blanking interval is identical. R13 sets the leading edge of the interval; the trailing edge is set by R8.

1.4 1865 Receiver Individual Assemblies

1.4.1 M117 Amplifier/Programmable Attenuator

The M117 amplifies the RF input and supplies part of the attenuation called for by the front-panel controls. The two wide-band amplifiers, consisting of Q101 through Q104 and Q201 through Q204, are identical, each providing approximately 24dB gain, flat to 400MHz. (450MHz for B units.)

Attenuators of 0, 10, or 20dB may be inserted between the amplifiers by applying voltages to module pins. The 0dB path is selected by applying a TTL high voltage to IC402 pin 3. Pin 2 is biased to approximately +3 volts by R407 and R408; when pin 3 is low, this positive voltage on the inverting input drives the output negative, reverse-biasing CR302 and CR305. A high on pin 3 drives the output positive, turning CR302 and CR305 on, allowing DC current with RF superimposed, to flow.

A high on the 10dB line, IC401 pin 3, turns on CR301 and CR304, allowing current to flow through R308, which, in conjunction with R306 and R307, forms a 10dB pi-section attenuator. The 20dB attenuator, R311, R309, R310, is switched in a similar manner. The front-panel switching is such that only one path at a time is selected.

The RF input to the Model 1865 goes first to the 1-10dB turret attenuator behind the front panel, then to the 10-70dB turret. When this turret is set to 0, 10, or 20dB it programs the M117 for that attenuation and feeds the signal directly to the module. At higher settings the attenuation of the turret is 20dB less than the setting; the attenuation in the M117 stays at 20dB, maximizing the signal to noise and dynamic range of the two amplifiers.

1.4.2 M118 Differential Biased Detector

The M118 detects the incoming RF signal from the M117 programmable attenuator. T1 converts the 75ohm unbalanced input to 75ohm balanced, and provides a tap output.

Where there is no input, IC1 pin 2 is biased near zero. On negative half cycles current flows through R3 and CR2, charging C2. On positive half cycles current flows through CR1; C2 discharges, adding its current. The resulting change of bias causes the output of IC1A to go negative. Negative half-cycles are treated similarly by the circuitry leading to IC1B pin 6. The diodes are biased in the linear portions of their characteristic curve.

The negative-going output of IC1A is algebraically subtracted from the positive-going output of IC1B in differential amplifier IC2A. The output of IC2A, always positive, is amplified by IC3 and IC4, which are connected as a low-pass amplifier which prevents the signal from changing too fast for the A-D converter (on the A-D/data memory card).

The output level, divided in half by R37 and R36, is fed to the comparator, IC2B. IC2B pin 5 is biased at 0.9 volts by R35. When the HOLD pulse is absent IC5 pins 2 and 3 are connected, feeding the difference between the output and the 2V reference back to IC2A, through Q3 and Q2. When the HOLD pulse arrives from the A/D card the switch between IC5 pins 2 and 3 is opened. C12 holds the feedback constant; the output is now added to the 2V bias level.

When S1, a mechanical switch on the module housing, is in manual, the switch between IC5 pins 14 and 15 is opened, removing the feedback entirely. This allows the balancing of IC2A by means of R23.

1.4.3 M119 PSK Detector

The M119 recovers sweep-parameter modulation from the 50MHz phase-shifted carrier.

The 50MHz carrier is filtered from the sweep by a band-pass amplifier consisting of Q101 and Q102. The output is mixed in MX1 with the output of the 46.42MHz voltage-controlled oscillator (VCO), which consists of Q201 and associated circuitry. CR201, a voltage-variable capacitor, resonates with L203 and L204.

The 3.58MHz output of MX1 is amplified by Q301 and IC301. The gain of the combination is greater than 60dB, resulting in a saturated output even for low input level. This is limited to TTL levels by Q302. The square-wave output of Q302 is one input to the phase detector, IC203; the other input is the 3.58MHz reference frequency from the timing card.

As the carrier phase begins to shift in a leading direction, the phase detector raises its output voltage, amplified and filtered by IC303A, which tends to raise the frequency of the VCO. As the VCO frequency begins to increase its cycles arrive earlier, causing the phase difference between the VCO and the input carrier to approach its previous value. This brings the phase-detector output voltage toward its previous value. The VCO thus returns to its previous frequency, but it is now shifted forward in phase to keep up with the carrier. A lagging shift in carrier phase has the opposite effect.

These pulses in the phase-detector output voltage are amplified by IC303B. Positive-going pulses are steered by CR302 to pin 2 of flip-flop IC304; negative-going pulses are steered to IC304 pin 6.

At power on, IC304 pin 11 may latch either high or low. Assume it to be low; then pin 4 is high. Pin 1 is tied high; pin 2 is low, so 3 is high. Pins 12 and 13 are both high, holding 11 and 5 low. A positive-going pulse brings pin 2 high for a short time. Pin 3 goes low, driving pin 11 high. Pins 4 and 12 go low, holding pin 11 high. When pin 11 is high, a positive pulse has no effect because pin 12 is low, and pin 13 has no effect on pin 11.

When pin 11 is high, a negative-going pulse is steered by CR303 to IC304 pin 6, bringing pin 4 high. Pin 13 is high, so pin 11 latches low.

1.4.4 Model 1865 Vertical/Horizontal Timing Card

The vertical/horizontal timing card supplies sync pulses and video information to the CRT.

Most timing functions are controlled by the timing control PROM, IC102. The vertical counter, consisting of IC101, IC103, and IC104, is set to zero during

the vertical sync pulse, and incremented by the 7.16MHz clock, IC118. Outputs from the counter are connected to the address lines of the PROM, selecting a new location with each clock tick. Output lines from the PROM go to latches IC105 and IC106. The latches are loaded by pulses from the 7.16MHz clock; inputs from the timing control PROM appear at latch outputs one clock pulse after they appear at the inputs to the PROM.

Outputs from the latches are used as system control signals. Each locations in the PROM contains a binary number whose bit pattern consists of the logic levels necessary to put the system into the proper state at each clock time.

The vertical sweep of the beam may be divided into three parts: dead time during which the beam is always off; alphanumeric, or A/N time, during which alphanumeric characters are painted on the screen; and display time, during which data, cursors, and grid lines are produced.

The Vertical clock begins to count at the end of the vertical sync pulse. The first fourteen ticks are dead time, allowing the beam to clear the bottom of the screen.

Line 4, A/N character, defines A/N time. It goes high at time 15 and is made available on the complementary output of the latch as ALPHA CHARACTER. Line 3, 1st ALPHA CHARACTER, goes high at the same time, switching the character selector, IC120 and IC121, to the inputs for the character for the display line labeled "M2" or "M2-M1". The two characters for the current sweep are held in latches on the control register card.

Characters are defined on a 7 x 7 dot matrix. Locations in the character generator PROM contain the bit patterns to generate dots (beam on) and no dots (beam off) to paint one column of a character. Each character is allocated eight locations; the eighth column of each character and the eighth position of each column are no dots, to provide spacing between lines and characters.

The character comes from the latches as a six-bit ASCII representation, which is used as the high-order portion of the nine-bit address of the character generator, selecting a block of eight columns. The lower three bits are

supplied by the column selector, IC116. This counter is loaded by the horizontal sync pulse or by its own overflow. It is clocked by the vertical sync pulse. The load value is 8 (decimal); since only the three low-order output bits are used, counting from 8 to 15 is equivalent to counting from 0 to 7.

The bit pattern for the selected column goes to row selector IC117. This is a one-of-eight data selector enabled by ALPHA-CHARACTER. A bit is selected by bits 1, 2, and 3 or the vertical counter. Since bit 1 of the counter toggles at half the clock rate, each dot is two clock ticks high.

The output of the row selector is inverted by IC113 becoming ALPHA-NUMERIC OUT, which drives the base of Q102. When ALPHA-NUMERIC OUT is high, the PNP transistor is off; when the line goes low, the transistor turns on causing current to flow to the video drive circuitry of the CRT module. R118 controls the current through Q102, hence the relative brightness of the alphanumeric portion of the display.

1st ALPHA CHARACTER goes low at time 31, selecting the character for line M1. Character generation is the same. The column selector is incremented by the vertical sync pulse; when it reaches its maximum count, the ripple-carry output goes high, reloading the counter and requesting the microprocessor to load two more characters into the latches.

A/N time ends at time 47 when A/N CHARACTER, output 4 of timing control goes low. ALPHA-CHARACTER goes high disabling IC117. Its output goes low sending ALPHA-NUMERIC OUT high, and holding Q102 off. IC117 continues to select rows of the current column, but they have no effect on the output.

Display time begins at time 47 when line 1, INTENSITY PROM ENABLE, goes high, the complementary output of the latch goes low, selecting the intensity control PROM, IC100. The other select input is connected to the complement of HORZ RETRACE and is active except during horizontal retrace.

Address inputs to intensity control are status lines (dot/line display, LEVEL/FREQ for each cursor, and requests for display of data, cursors, and grid lines.) Each location contains a bit pattern which turns on one (and only one) of the intensity-control transistors Q101 and Q103 through Q109. The logic that generated the bit patterns in the PROM established precedence as follows: If a cursor is requested at the same time as grid or data (i.e. for the same point on the screen) one of the cursor transistors (depending on cursor mode and display) is turned on, rather than grid or data transistors. Grid requests take precedence over data requests. The use of separate transistors for various combinations of display mode and cursor mode allows relative brightness of display elements to be adjusted for best display readability. Display time ends at time 305 when line 1, intensity control, goes low. Line 7 goes high at time 321, beginning the vertical sync pulse, and goes low at time 457. At time 456 a one-count pulse is produced which resets the vertical counter.

Horizontal sync is produced by the horizontal counter, IC107, IC108, and IC109, which is clocked by the beginning of the vertical sync pulse. The counter loads with a value of 5, so it is 251 counts (251 lines) later that it reaches 256 (decimal). On the next count IC109 pin 14 goes high, producing HORZ RETRACE at IC113 pin 2. IC107 is at a count of 1 at this time; when it reaches 9, 8 lines later, IC119 goes low, loading the counter and bringing HORZ RETRACE high again.

Horizontal grid lines are produced by line 6 of timing control, which produces a one-count pulse each 32 clock ticks during display time. When HORZ RETRACE is inactive, i.e. high, IC114 pin 4 is high. IC114 pin 5 is normally low, so IC114 pin 6 is high. IC112 pin 15 is normally low, so IC119 pin 11 is high. Thus both inputs of IC114 pins 12 and 13 are high, and IC114 pin 8 is high, so IC113 pin 8 is low. When GRID goes high, IC114 pin 6 goes low sending IC114 pin 11 high. IC114 pin 10 is high when IC101 pin 14 is low, every other clock pulse. IC101 pin 14 is the low-order bit in the clock time, so it is high on odd counts. The counts on which line 6 is high are odd, but the level appears at the output of the latch one clock pulse later, by which time IC101 pin 14 has gone low. Thus IC114 pin 3 is high. IC114 pin 8 is low, and IC113 pin 8 is high, requesting a grid output from intensity control.

Vertical grid lines are produced by the horizontal grid counter, consisting of IC111 and IC112. When HORZ RETRACE is high, the complement from IC113 pin 6 holds the A input of IC112 and the D input of IC111 low. All other inputs are tied high; the result is a start count of 231 (decimal). When the count, clocked by vertical sync, reaches 255, IC112 pin 14 goes high. When DATA LOAD goes high at the start of display time, IC119 pin 11 goes low, thus sending IC114 pin 11 high. On alternate clock counts IC114 pin 3 is high producing a series of pulses at IC114 pin 8, hence at the grid input to intensity control. The vertical line is chopped to make it comparable in intensity to the horizontal grid lines, which are also composed of dots. DATA LOAD goes low at time 303, shutting off the pulses. Counting from 321 to 255 produces a vertical line every 25 sweeps.

Production of grid lines is inhibited while HORZ RETRACE is low. IC113 pin 6 is high, forcing the reset of IC111 and IC112 to 255 (decimal). IC110 pin 9 is low so IC110 pin 10 is low, holding the counters at load. IC112 pin 15 is high, since the counters are at their maximum count.

When HORZ RETRACE goes high, the load value of the counters goes back to 232 (decimal). This value does not appear at the output until the next vertical sync pulse, so IC112 pin 15 is still high, holding IC110 pin 10 low and holding the counters at load. The display is now enabled so a line is produced during the time DATA LOAD is high. At the next vertical sync pulse the load value of 231 appears on the outputs of the counters. IC112 pin 15 goes low and counting resumes.

Cursors are produced by cursor generators IC126 and IC127 (for M1) and IC123 and IC124 (for M2). Cursor mode selectors IC125 (for M1) and IC122 (for M2) are four-of-eight data selectors which connect appropriate load and clock signals to the counters. When M1, for instance, is in LEVEL mode, the latch on the control register card holds IC125 pin 1 low, selecting the A inputs. DATA LOAD, line 5 from timing control, becomes DATA LOAD at the complementary out of the latch. In LEVEL mode this signal loads the counter with the value from the cursor 1 latch on the control register board. IC126 and IC127 are incremented by the vertical clock; when they reach 255 (decimal), IC127 pin 15 goes high for one tick, requesting a dot as part of the horizontal cursor. At the next

clock tick the counters overflow to zero and continue upward, but this is irrelevant, since only the output from IC127 pin 14 is used, and the counters are reloaded at the beginning of the next sweep.

The B inputs to the mode selectors are used for FREQ mode. Counters are loaded by HORZ RETRACE and clocked by vertical retrace. When the count reaches 255 (decimal), IC127 pin 15 goes high for one count, that is one sweep, producing a cursor request which will be honored while intensity control is enabled.

1.4.5 Control Register Card

The control register card contains latches which hand off data and status information to the vertical horizontal timing card. It contains circuitry to provide the variable clock for the A/D-data memory card, and provides signals for LINE and DOT modes to the timing card.

A pair of latches is selected by one of the I/O select bits N0, N1, or N2, in conjunction with address bit A0. To address IC201 and IC202, for example, the microprocessor executes the "Output to Port 1" instruction. N0 is high when MRD goes low. IC216 pin 3 goes low, activating one of the enable inputs on the latches. The other enable is connected by A0, which was set during the Fetch portion of the cycle when the byte to be output was read from memory. Thus it is seen that the number for cursor 1 must be stored in an even-address memory location, so that A0 will be low. Cursor 2 is set by outputting to port 1 from an odd location. Writing to port 2 from an even location enables IC205 and IC206 and so on. Timing pulse TPB strobes the byte into the latches.

A four-bit byte in IC212 sets the timing factor for the variable clock. This number presets IC214, which counts up to 15 (decimal). While the count is less than 15 the ripple-carry output, IC214 pin 15, is low, causing flipflop IC213 to hold its present state. The the count reaches 15, RC goes high, allowing IC213 to toggle on the next clock pulse. Thus IC214 times halfcycles of a symmetrical output from IC213.

A data line or dot on the display is produced by loading a value from RAM into latches IC223 and IC224. This is accomplished via Direct Memory Access (DMA), as follows: HORZ RETRACE is high during display generation, VERTICAL SYNC goes

low at the end of the upward sweep, sending IC220 pin 6 high. At the end of the vertical sync time VERTICAL SYNC goes high, sending IC220 pin 6 low, clocking a high level to the Q output of IC221. IC210 pin 4 is high, so DMA OUT goes low, requesting a DMA output from the microprocessor. The microprocessor has an interval address register which points to the location of the next data value. This address is put on the address bus and MRD is brought high low, putting the byte on the data bus. This is the value from a conversion by the A D/Memory board of an output from the M118 biased detector. When the microprocessor has done this, it sets S1 (P3-19) high and S0 (P3-17) low, indicating a DMA state. This combination clocks the data value into latches IC223 and IC224, and resets IC221.

DATA LOAD from the timing card holds counters IC222 and IC225 at LOAD while the CRT beam is painting characters. When the DATA LOAD goes high, control of the beam passes to data circuitry. IC222 and IC225 begin to count down from the load value given them from data memory. When the count passes through zero, RC (IC222 pin 15) goes low for one count. DOT DATA (IC220 pin 11) goes low, signalling the intensity control PROM on the timing card to turn the beam on for one count, its DOT mode is in effect.

1.4.6 1865 Microprocessor Card

The microprocessor card contains the microprocessor, support and interface chips.

The microprocessor is a CDP1802DC, an eight-bit statis CMOS part. With two exceptions, pins designated active high (no bar) are inputs. The exceptions are MRD and MWR. (The data bus is bidirectional.)

A sixteen-bit address is put on the eight-bit-wide address bus as two eight-bit bytes. Timing pulse TPA is raised when the first byte is on the bus; this latches the byte into IC302 and IC303. High-order address bits go to IC301, a one-of-eight decoder, which selects ROM, RAM, or keyboard. ROM2 is installed only if card reader option is installed.

R303 and C301 perform power-on reset.

The test socket (DATA bus ports of microprocessor) normally contains a DIP plug which connects the data bus to the data I/O pins on the microprocessor. When the test plug is substituted for the standard plug, some bits are open pulled up by R308; others are held at ground. The result is that every instruction fetch sees the code for NOP (no operation). This causes the microprocessor to fetch the next instruction, which is also NOP. Continuing, the microprocessor cycles through all the addresses. This feature is used for signature analysis.

IC306 is a universal asynchronous receiver-transmitter (UART), used to convert the serial bits from the M119 PSK Demodulator into parallel bytes.

Information on the six low-order address bits is always made available to the keyboard via IC304. When the microprocessor wants to scan the keyboard, IC301 selects the three-state inverter IC305, which passes levels from closed keys to the data bus.

IC311 and IC312 divide the clock frequency by 372 for the UART.

1.4.7 Model 1865 A-D Data Memory Card

The A-D/memory card measures voltages from the M118 biased detector, expressing the results as eight-bit binary numbers which are stored for use by the display circuitry and the microprocessor. On pass 1 the Model 1855 Transmitter sends sweep parameters and a trigger pulse, but no sweep; the Model 1865 measures the voltage of sync and video on the cable. On pass 2, one TV frame later, the sweep is sent. The A-D card subtracts the pass 1 voltage as it measures pass 2; since the sync signals are the same in this frame, and the video nearly the same, the result of the pass 2 measurement is the sweep voltage only.

Pilot-carrier information from the M119 PSK Demodulator comes to IC402 pin 11, and is passed via P7 pin 46 to the UART on the Microprocessor Card. The Q output of the microprocessor has been low between sweeps, holding IC414 and IC415 at LOAD. The load value is the maximum count, so IC414 pin 15 is high, which holds IC402 pin 4, INPUT ENABLE, low. This disables IC410, which provides various clock signals during the conversion.

When the microprocessor has stored the sweep parameters and verified the checksum, it brings Q high. This allows IC412 pin 2 to pass the triggering pulse from the pilot carrier. This pulse is positive-going, so it triggers IC423 at pin 2. This one-shot brings IC414 pin 1 and IC415 pin 1 low for approximately 20 µsec, setting the counter outputs to zero. IC414 pin 15 goes low, raising INPUT ENABLE. The trailing edge of the trigger pulse triggers IC423 at pin 9. The output will stay high for about 80 msec, somewhat longer than one TV frame time. IC410 is connected as a shift register. Pin 1, the CLEAR input, has been low; when it goes high, the variable clock at pin 9 causes the level at the D2 input (pin 4) to pass to the Q2 output (pin 5). This input is the inverse of CC (Conversion Complete), which has been low; the result is that C1, C2, C3, C4, and Q1 go high on successive clock transitions. The upward transition of C3 would clock IC414 and IC415, except that the CLEAR pulse from IC423 is still present. (R426 adjusts the pulse width so that this is the case.) When Q1 (IC410 pin 2) goes low SC (Start Conversion) goes low, signalling the analog-to-digital conversion circuitry to commence measuring the output of the M118.

IC407 is a digital-to-analog converter (DAC) which sinks a current proportional to the binary number on its input lines. IC406 produces a reference current; each of the eight DAC input pins switches a portion of the reference.

Bit 7, the most significant bit (MSB) switches 2^{-1}, or 1/2 times the reference current; bit 6 switches 2^{-2} or 1/4, etc. Bit 0, the least significant bit (LSB), switches 2^{-8} or 1/256 times the reference. When all switches are on, the current is 255/256 times the reference.

The voltage from the M118 biased detector produces a current through R403 into the summing node at the inverting input of the comparator, IC408. If the current out of the node into the DAC is greater, the difference flows into the node through R405, putting the node below ground and causing the output of the comparator to be positive. If the DC current is less than the M118 current, the difference flows out, and the comparator output is negative. The successive approximation register (SAR) tries each switch in turn, starting with the MSB, and uses the comparator output to decide whether to keep the switch closed or open it. After the eighth increment (switched by the LSB) has been tested, the current into the DAC is the best possible approximation to the current from the M118. (That is, the current through R405 is minimized.)

After the LSB has been tried, the SAR brings CC low, which causes a high level to ripple from Q2 to Q1. C2 locks the binary number from the SAR into the data memory, IC416 and IC417. INPUT ENABLE has been allowing data selectors IC418 and IC419 to send the output of counters IC414 and IC415 to the address lines of the memory. C3 clocks the counters (the CLEAR from IC423 no longer objecting), and Q1 lowers SC to start the next conversion.

The SAR uses negative-true logic (0 = true, 1 = false); the I output of the SAR is used so that the current will behave correctly. The memory input drivers, portions of IC402, IC413, and IC422, invert the data from the SAR, so that the number is stored as positive-true.

After 256 conversions have been made IC414 and IC415 reach maximum count. IC414 pin 15 goes high bringing INPUT ENABLE low, which disables IC410. IC414 is clocked at pin 15, but PASS 1 is low, so the high of EF2 does not change.

The circuitry is now quiescent until the pass 2 trigger pulse arrives. When the trigger pulse arrives, the action proceeds as for pass 1, except that IC414 pin 3 clocks the high on pin 5 to pin 1, making PASS 1 high. This removes the CLEAR from latches IC403 and IC404; each time CC goes high the number from the memory location addressed by IC414 and IC415 is strobed to the inputs of the subtraction DAC, IC405. IC414 and IC415 point to the location into which the new conversion value is to go; the value currently in that location is the measurement from the same point in time during pass 1. This pass 1 value stays on the inputs of the subtraction DAC throughout the conversion. The subtraction DAC sinks a current due to the sweep voltage to be approximated by the PASS 1 DAC.

When the count reaches 256, IC414 pin 15 again goes high. This clocks IC424 at pin 11, sending the high on PASS 1 to pin 12. This is the Q output, so the high appears as a low, which is sent to EF2, one of the External Flag pins on the microprocessor. The microprocessor checks the status of this pin periodically; when it is low, the microprocessor brings its Q output low. This resets both halves of IC424, bring PASS 1 low and EF2 high, ready for the next sweep.

If the pass 2 trigger had been lost, IC423 pin 5 would have timed out after 40 msec, and the next trigger pulse would have been properly interpreted as pass 1.

1.4.8 CRT

The CRT module is a Motorola M1000-155 with modifications. The major change is the removal of the horizontal oscillator, since horizontal timing is done on the horizontal/vertical timing card. The deflection yoke is rotated 90° counterclockwise, to orient the raster scan properly.

R21, C47, and Q13 form a slow-turn-on circuit for the CRT filament. At power-on C47 has no charge, so the gate of Q13 is at ground and no current flows. As C47 charges through R21, Q13 gradually increases the filament current.

1.4.9 Power Supplies

Voltages other than +12 unregulated are supplied by switching regulators. Advantages include high efficiency and the availability of negative polarity and voltages higher than the battery. Refer to the schematic for power supplies 1 and 2. When the square-wave drive is high, Q1 is saturated, so the loss is very low. A magnetic field builds up around L1; C1 charges toward the battery voltage. When the drive goes low, Q1 cuts off. The collapsing magnetic field around L1 tries to keep the current flowing; this current flows through CR1. The discharge of C1 contributes current to the load. Output voltage is controlled by varying the duty cycle of the drive, and is set for +5 V.

The square-wave drive in the Model 1865 power supplies is provided by IC2. This special-purpose IC contains an oscillator whose frequency is controlled by C5 and R17 on cards 1 and 2, and a pulse-width modulator. The square wave from the oscillator is converted to a triangular wave, which is compared with the control voltage on IC2 pin 6. The output is high while the triangular wave is higher than the control voltage, low when the triangular wave is lower. Thus a higher voltage on pin 6 results in a shorter duty cycle on the output and a lower voltage from the regulator.

The output voltage is fed to IC1A pin 3, where it is compared with the reference voltage from IC2 pin 9, buffered by IC1B. If the load current increases, the output voltage decreases and the voltage on IC2 pin 6 decreases, increasing the duty cycle of the drive.

When the inhibit line is high, Q2 conducts bringing IC2 pin 14 low and shutting off the drive. The filter capacitors discharge, and the output voltage drops to zero.

C3, R9, Q1, and associated diodes form a "soft-start" circuit. When power is applied, C3 charges through R9 and CR3. As the decreasing current through R9 brings the voltage on IC2 pin 6 down from 12 volts, the output current increases proportionally.

When the voltage on pin 6 drops below the voltage on IC1A pin 1, CR1 conducts and CR3 turns off. The feedback is now in control of the output. When the inhibit line is brought high, the low voltage on the collector of Q2 turns Q1 on, discharging C3, ready for the next start.

Power supply card 3 provides a voltage higher than the supply (+20V). When Q1 conducts, current flows from the battery through L1 and Q1 to ground. When Q1 cuts off, the collapsing magnetic field of L1 forces current through CR1, charging C1. The voltage on C1 is determined by its capacitance and the amount of charge deposited by the current pulses. CR1 prevents C1 from discharging through Q1 when Q1 conducts.

IC2 pins 11 and 13 are separate outputs of the drive wave. On cards 1 and 2 they are tied together; on card 3 the second output, IC2 pin 13, drives a separate supply. The circuit is similar in operation to the circuit driven by output 1, IC2 pin 11, except that the relation of L2 and CR6 produces a negative voltage at the output (-6V). The output voltage is amplified by IC3B and compared in IC3A with the triangular wave from IC2 pin 8.

(IC2 pin 5 feeds the triangular wave to the internal comparator.) The output of IC3A controls IC2 pin 16, which varies the symmetry of output 2 relative to output 1, providing independent regulation of the second supply.

Board #4 is the same as #3 but set for +15, -15. Power supply #5 is set at 11.5V and provides voltage for the CRT. When the battery voltage is above the regulated level, current flows through CR4 ≅ 1V drop). When battery voltage falls, the regulator takes over putting a floor under the voltage.

IC4A provides low-battery information to the microprocessor. Battery voltage is compared with the reference voltage from IC2 via IC1B. When the battery voltage falls below a level set by R24, the output of IC4A goes high.

When the microprocessor signals low battery or asks for the card reader, it applies a positive voltage to the anodes of CR5 and CR6. Q3 turns on, bringing IC4 pin 7 low. This turns Q4 off, allowing K1 and K2 to switch to pins 16 and 14 respectively. This removes power from the display, and connects the battery to the card reader terminals. (The card reader is controlled by a signal from the control register card, and is not energized by the low-battery signal.)

At power-on, IC4 pin 7 cannot go high until C13 charges through R28 to a voltage higher than the bias imposed on IC4 pin 6 by R29 and R31. This allows time for the regulator to come up to voltage.

2.1 Preparation

Prepare the 1855 for calibration by removing the top and bottom covers. The top cover can be removed by unfastening the #8 screw in the middle at the back of the unit. The bottom cover can be removed by unfastening the two rear feet from the unit. Most of the tests can be performed with the transmitter placed on its side with the front panel facing the user; providing easy access to test points and adjustments.

2.1.1 Power Supply Voltages

Check power supply voltages on pins 1-4 of M138. See Figure 1 for pin numbering system. Pin 1 is the unregulated +9 or 10 volts from the power supply. Pin 2 is the +5 volts that is regulated in the M138. Pin 3 is +18 volts and pin 4 is -18 volts. The ±18 volts should be adjusted to ±.01 volts using the adjustment pots on the power supply P.C. board. See the top view of the 1855 in the schematic section for the location of the adjustments.

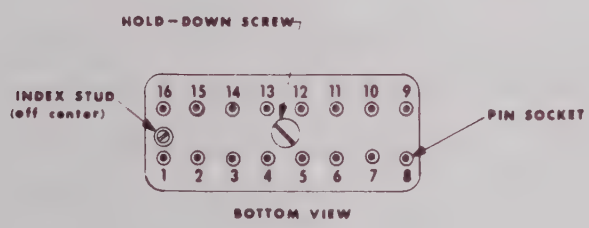

Figure 2.1. Module Pin Numbering System

2.1.2 Diagnostic Test Mode

The unit can be put into its test mode by pressing the "CLEAR ENTRY", "." (decimal point), and "CATV/CS" keys in succession, holding all of them until the last one has been pressed. "1855" should appear on the display. When

tests that are made in the diagnostic test mode are completed, pressing the "7" key will return the 1855 to its normal operating reset parameters.

L.E.D. Test

Pressing the "8" key will now activate all of the front panel LED's. This will enable a check of the relative brightness of the LED's and location of LED failures.

Ramp Test

Pressing the "9" key enables a test of the ramp card. There are 6 test points on the ramp card, labeled TP1-TP6. The test points will have the following indications, which should be monitored on an oscilloscope (referenced to ground).

TP1 = +13.5 VDC
TP2 = +13V Ramp
TP3 = +1.5V Ramp
TP4 = +10V Ramp
TP5 = +1V Ramp
TP6 = -10V Ramp

Sweep Drive Adjustment

Pressing "F-1" or "F-2" enables a test of start, stop, and center frequency. The center frequency should be set up first. Press "F-1". Pull the ramp card up out of its edge connectors. The frequency displayed on the front panel can now be adjusted to 200MHz by the "CENTER" pot on the M9L-1. Reseat the ramp card into its edge connectors. Pressing "F-1" will display the start frequency, and pressing "F-2" will display the stop frequency. The start frequency will adjust to 0MHz; the stop frequency will adjust to 400MHz. The width and center pots on the upper right hand corner of the ramp card are used to adjust the end points. The pots affect each other. Press "F-1". Adjust the width pot for a frequency halfway to the objective frequency (0.00MHz). Press "F-2". Adjust the center pot for a frequency halfway to the objective frequency (400MHz). Repeat this process until F-1 = 0.00MHz ±0.5MHz and F-2 = 400MHz ±0.5MHz.

2.1.3 Output Level Calibration

Disconnect the cable from the output of the M135 to the M171. Connect the power meter probe to the M135 output. With a +50dBmV front panel output setting, adjust the minimum pot on the M135 for a +40dBmV ±.2dB reading on the power meter. Then change the front panel output setting to +60dBmV and adjust the M135 maximum pot for a +50dBmV ±.2dB reading on the power meter. The maximum and minimum pots on the M135 affect each other so repeat the adjustments as necessary. (If there are two or three pilots in the transmitter, flip the dual pilot switch and follow the same adjustment procedure for each pilot module). Reconnect the cable to the output of the M135 module.

Connect the power meter probe to the 1855 RF output connector. Set the sweep repetition rate for 15 seconds. Adjust the "LEVEL PSK" pot on the M171 for an output level 20dB below the output level indicated on the front panel.

Press the "CATV/CS" key. Enter 200MHz for F-1 and F-2. This makes the output a CW signal at 200MHz. Set the 1855 level at +50dBmV. Adjust the "MIN" pot on the M171 for a power meter reading of +50dBmV ±0.2dB. Set the 1855 level at +60dBmV. Adjust the "MAX" pot on the M171 for a power meter reading of +60dBmV ±0.2dB.

2.1.4 Horizontal Output

Check the horizontal output on the rear of the 1855 by connecting it to a scope. With the transmitter in CS (constant sweep) mode, (press the "CATV/CS" key) the ramp should be 10V peak and 1ms retrace. The frequency will vary as the sweep rate is changed.

2.1.5 Harmonic Output

Check the harmonic output of the 1855 by connecting the RF output to a spectrum analyzer. Start with a CW signal at 10MHz and +60dBmV. Move the signal through the frequency range of the 1855 by holding the " " key. Harmonics should be ≥30dB down from the carrier. Spurs should be ≥35dB down. If these are out of specification and appear to be causing a problem, we recommend the unit be returned to Wavetek. Please call 800-622-5515 for a return authorization number.

2.1.6 1855 DIP SHUNT CALIBRATION PROCEDURE

One indication of an improperly cut or uncut dip shunt is a sweep response with a grassy display on the 1865.

1. With the 1855 unplugged, slide off the top cover by removing the single #8 screw from the top rear of the unit.

2. Connect the center conductor of the frequency counter to pin B of the microprocessor card. (Pin A is open, so shorting to this pin will not damage the unit.) The microprocessor card is the plug in card closest to the front of the unit. This card can be damaged by static electricity if removed from the unit, so static safe handling procedures must be followed!

3. The shield of the frequency counter probe should be grounded to the 1855 chassis.

4. Plug the 1855 line cord in, turn the unit on, and allow it to warm up for five minutes.

5. Set the frequency counter to measure 1 MHz and record the error from 1MHz in Hz.

   Example: Count of 1.000053MHz is 53Hz high
   Count of .999994MHz is 6Hz low

Refer to Diagram of Dip Shunt for the following steps.

6. a. (50Hz AC Line Operation)
   If the unit is being calibrated for 50Hz operation, break the jumper marked $\frac{50Hz}{60Hz}$. Divide the error from Step 5 by 25Hz. This result will be used in Step 7.

   b. (60Hz AC Line Operation)
   If the unit is being calibrated for 60Hz operation, leave the jumper marked $\frac{50Hz}{60Hz}$ intact. Divide the error from Step 5 by 30Hz. This result will be used in Step 7.

If the result from Step 6 is greater than 16, the 4MHz crystal (X201) or the 27 pf caps (C203, C204) are bad. If the result from Step 6 is less than 16, break the proper "16, 8, 4, 2, 1" jumper such that the jumpers remaining intact add up to the error number from Step 6. If the error was high, break the $\frac{\text{"High"}}{\text{Low}}$ jumper.

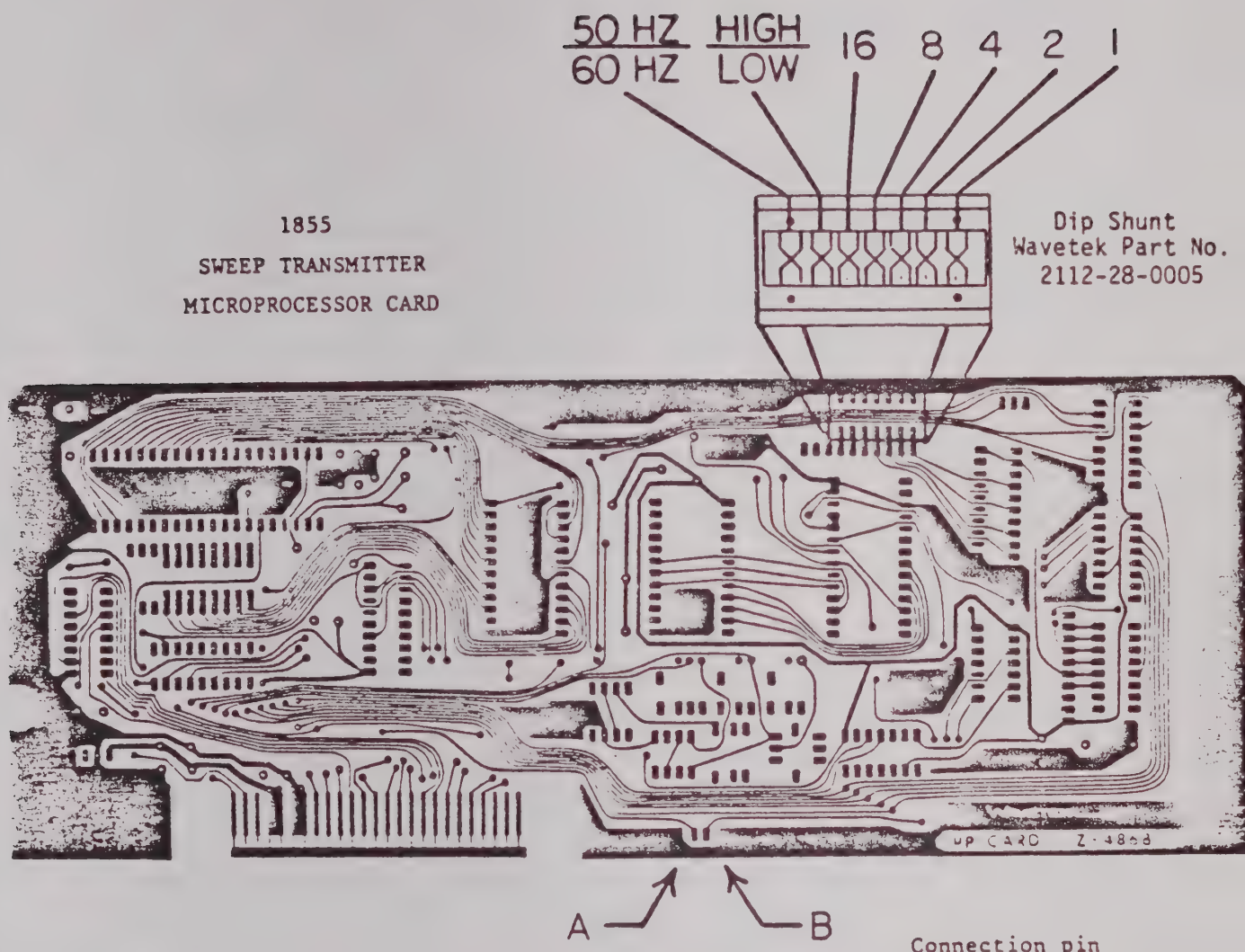

Calibration Example:

With the unit set up per Steps 1, 2, 3, and 4, the frequency measured in Step 5 is 87Hz high. The Step 6 calculated error is $\frac{87}{30} = 3$. To calibrate the dip shunt, break the "$\frac{\text{High}}{\text{Low}}$", "16", "8" & "4" jumpers, leaving the "50Hz", "2" and "1" jumpers intact.

Calibrated Dip Shunt:

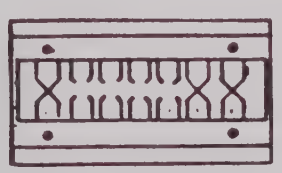

3.1 Preparation

Remove the unit from the cabinet by removing the 16 phillips head screws from the outer edge of the front panel. Push the unit out as far as you can from the rear, through the opening for access to the charging connector. Then grasp the front panel, hook your feet in the cabinet belt and pull the unit the rest of the way out of the cabinet.

Remove the top and bottom covers.

3.1.1 Power Supply Adjustments

See the top view of the 1865 in the schematic section for location of power supplies and adjustments. The power supplies are the smaller printed circuit assemblies in the back of the unit next to the battery cavity. The voltages are measured on the bottom of the unit, on the mother board, where the boards plug into the unit. See Figure 5-2 for the location of voltage test points. A voltmeter probe, referenced to chassis ground, can be placed on these points to measure and set each of the following voltages, numbered one through five from back to front. Set the power supply voltages to the following specifications.

Both +5V Adj. to +5VDC ±.05
-6V Adj. to -6VDC ±.05
+20V Adj. to +20VDC ±.10
+15V Adj. to +15VDC ±.05
-15V Adj. to -15VDC ±.05
+12V Adj. to +11.3VDC ±.05

NOTE: As a battery-saving feature, three of the 1865 power supplies power down when not in use. In order to keep the power supplies in the power on mode remove the jumper (J201) on the register card. Be sure to put this jumper back in the same position (to the left) when power supply adjustments are completed. Connect the 1855 RF output to the 1865 RF input and check supplies 2 through 4 to make sure that they power down between triggers.

1865 BOTTOM VIEW

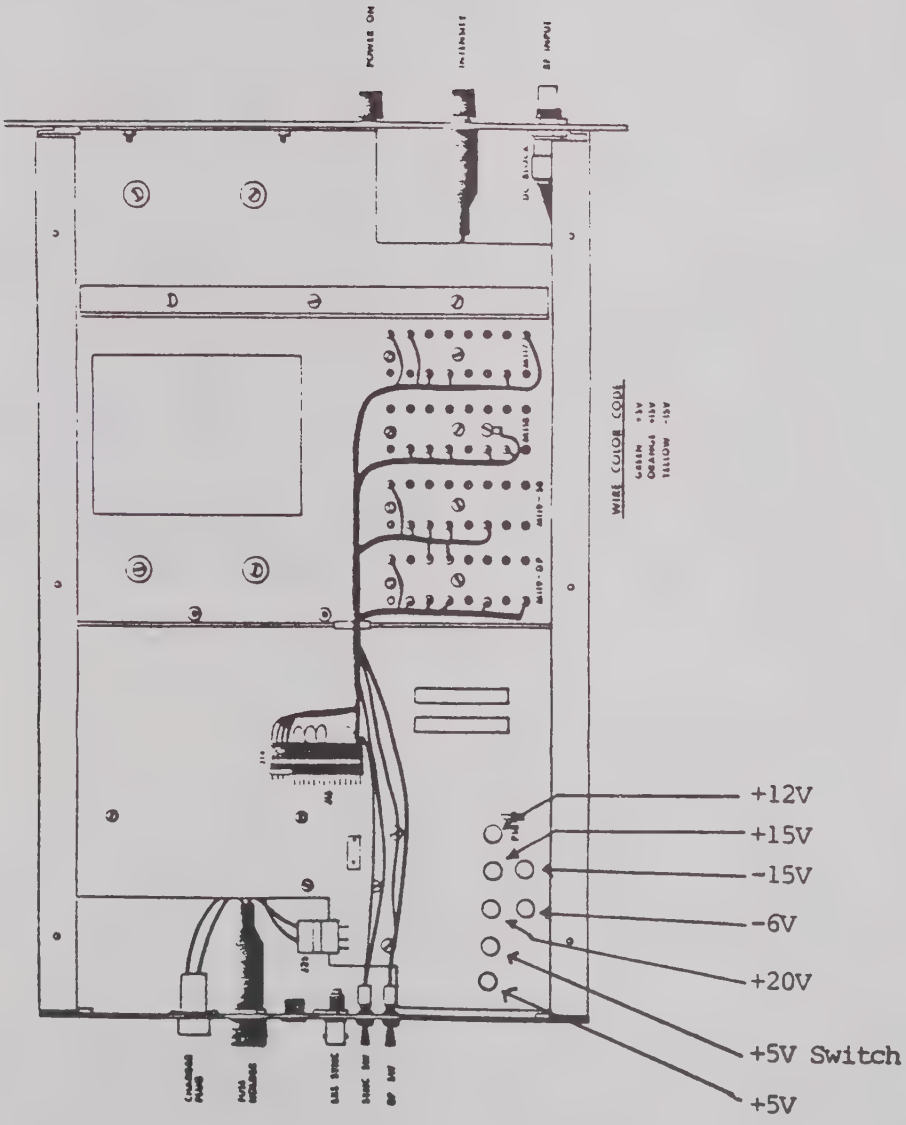

3.1.2 Low Battery Adjustment

To keep the battery from going into a state of deep discharge, when the battery voltage discharges to 10.4 volts a "BATT" indication appears in the lower right corner of the display. About one minute after the indication appears the CRT will blank off. This slows the drain on the battery. The low-battery indication voltage is controlled by an adjustment of R24 on power supply number 5. In order to make this adjustment, remove the battery from the circuit by taking out the 4 amp fuse in the back of the 1865. Plug a variable DC voltage supply into the charge connector. Connect a DVM to the positive terminal of the charge connector in order to monitor the variable supply voltage. Put the 1865 in the "HOLD" mode. Slowly decrease the voltage from +12VDC and monitor the CRT display, watching for the "BATT" indication. Adjust R24 so that the "BATT" indication appears when the variable supply voltage is at 10.4VDC.

3.1.3 CRT

The CRT display may be centered in the bezel by rotating the two metal rings around the CRT yoke. Vertical display size can be adjusted by tuning L1, the tuneable coil on the high voltage board. For horizontal size and linearity adjustments refer to the CRT schematic to find which pots control which functions. Part of Wavetek's modification of the CRT, to make it fit in our application, is to turn the yoke 90°. For this reason the functions on the CRT PC board designated as vertical are actually horizontal adjustments. The CRT schematic has the proper reference designations and function labels.

3.1.4 M119

Check Pin 1 of the M119 (refer to figure 5-1 for pin numbering system) for a DC voltage between -5 and -9VDC. The unit must be in power up mode (input indication on lower right of display) and a pilot present. If the 1865 has a triggering problem and this phase-lock voltage is out of range, please call Wavetek at 800-622-5515 for a return authorization number for either the 1865 or the M119 module.

3.1.5 Frequency Adjustment

With an accurate 200MHz CW source summed in at the same amplitude as the sweep from the transmitter, and the transmitter set up to sweep from 180 to 220MHz, a zero beat marker will be created. Adjust the frequency offset pot (R426) on the A/D card so that the marker is in the center of the display.

3.1.6 Gain Adjustment

Set the 1865 attenuators at 65dB and the output of a calibrated 1855 at +55dBmV. The adjustment is on the M118. Make sure the MAN/AUTO switch is in the AUTO position. Adjust the GAIN pot so that the response lines up with the middle graticule line of the display. (NOTE: Do not adjust the CENTER pot. This is only adjusted during the original calibration of the module, which is done in a special test fixture.)

3.1.7 Timing Adjustments

If it is necessary, the intensity of the GRID, DATA, cursors in LINE or AMPLitude modes, and the ALPHA-numerics can each be adjusted individually with the row of pots at the top of the VERTICAL/HORIZONTAL TIMING CARD. Adjust the LINE pots with the unit in LINE mode and the DOT pots with the unit in the DOT mode. In the line mode the GRID should have less intensity than the DATA, and the cursors in LINE AMPL and the LINE FREQ should have brightness equal to or brighter than the DATA. The ALPHA's should be the same intensity as the DATA. In the DOT mode, the GRID should be the same intensity as the LINE GRID. The DOT DATA should be brighter than the cursors (DOT AMPL and DOT FREQ), which should be as bright as the line cursors.

Probably the most common type of failure in the sweep recovery system is the lack of a trigger, or update of the sweep response. The first thing to do when this occurs is check the pilot and sync switches on the rear panel of both units to make sure they are in the proper positions. The following trouble shooting tree should be an aid in trouble analysis.

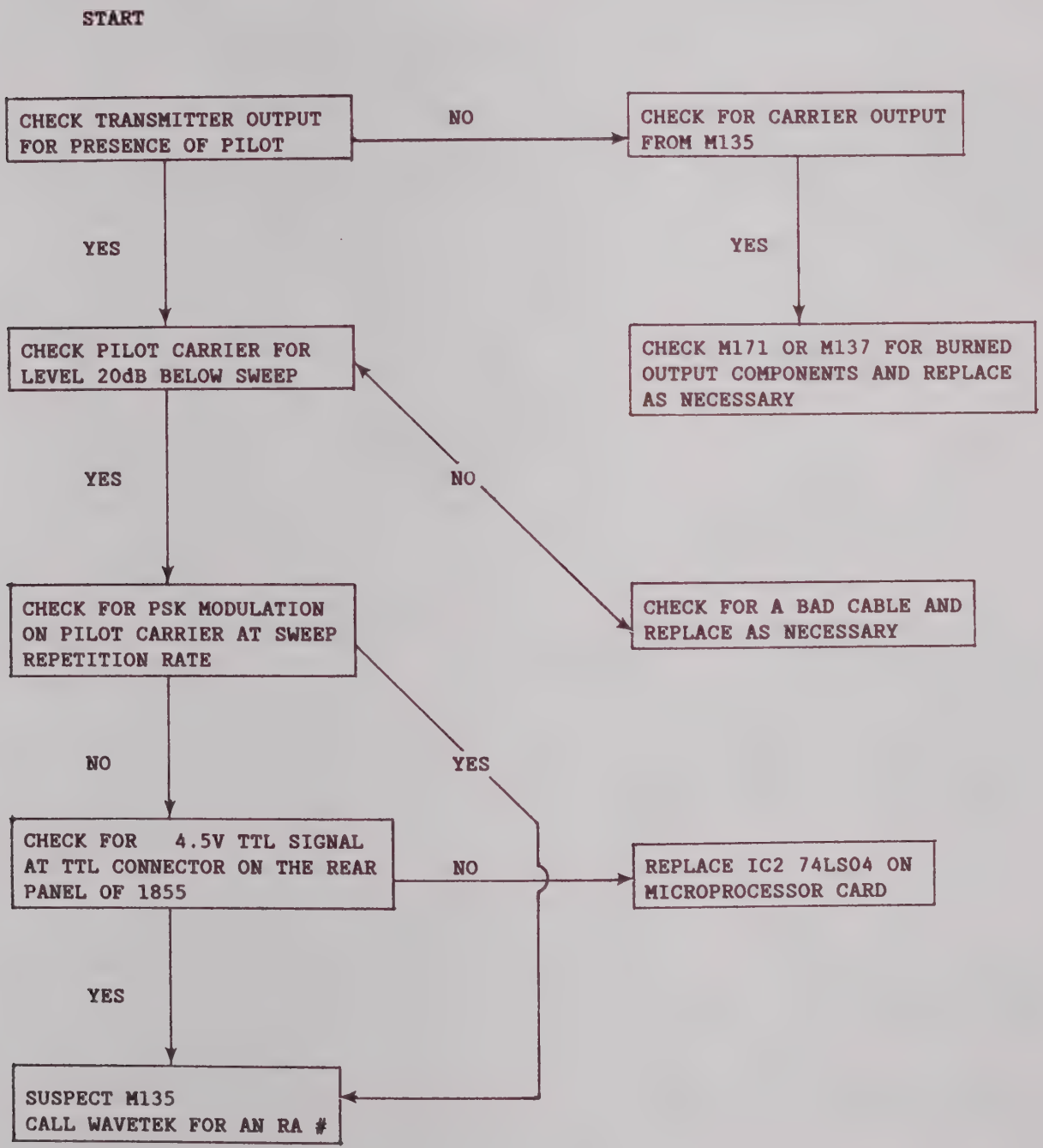

The following troubleshooting tree will aid in analysis of 1865 problems, after the performance of the 1855 transmitter has been verified.

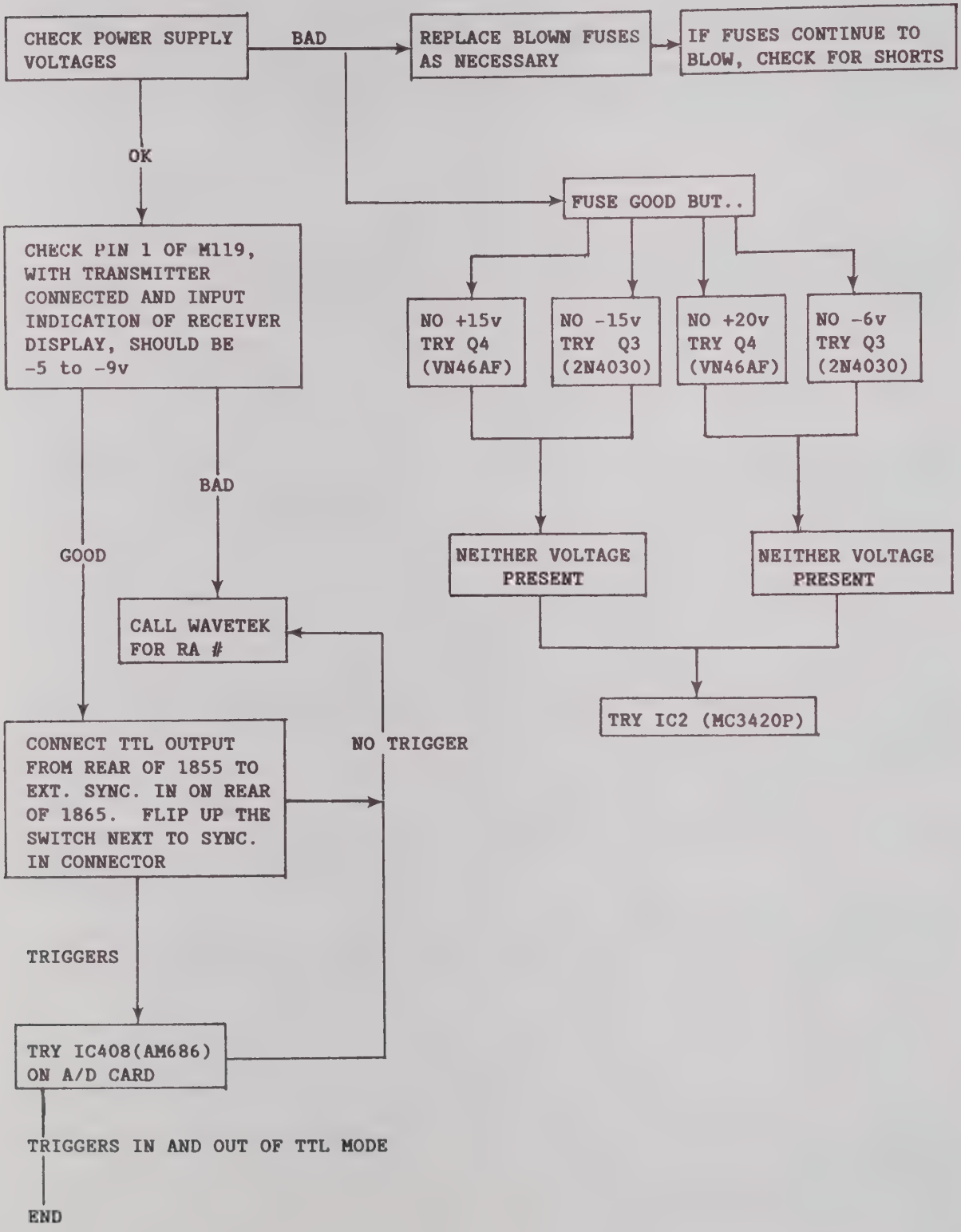

The following troubleshooting trees will aid in the analysis of problems with the turn on of the transmitter and receiver.

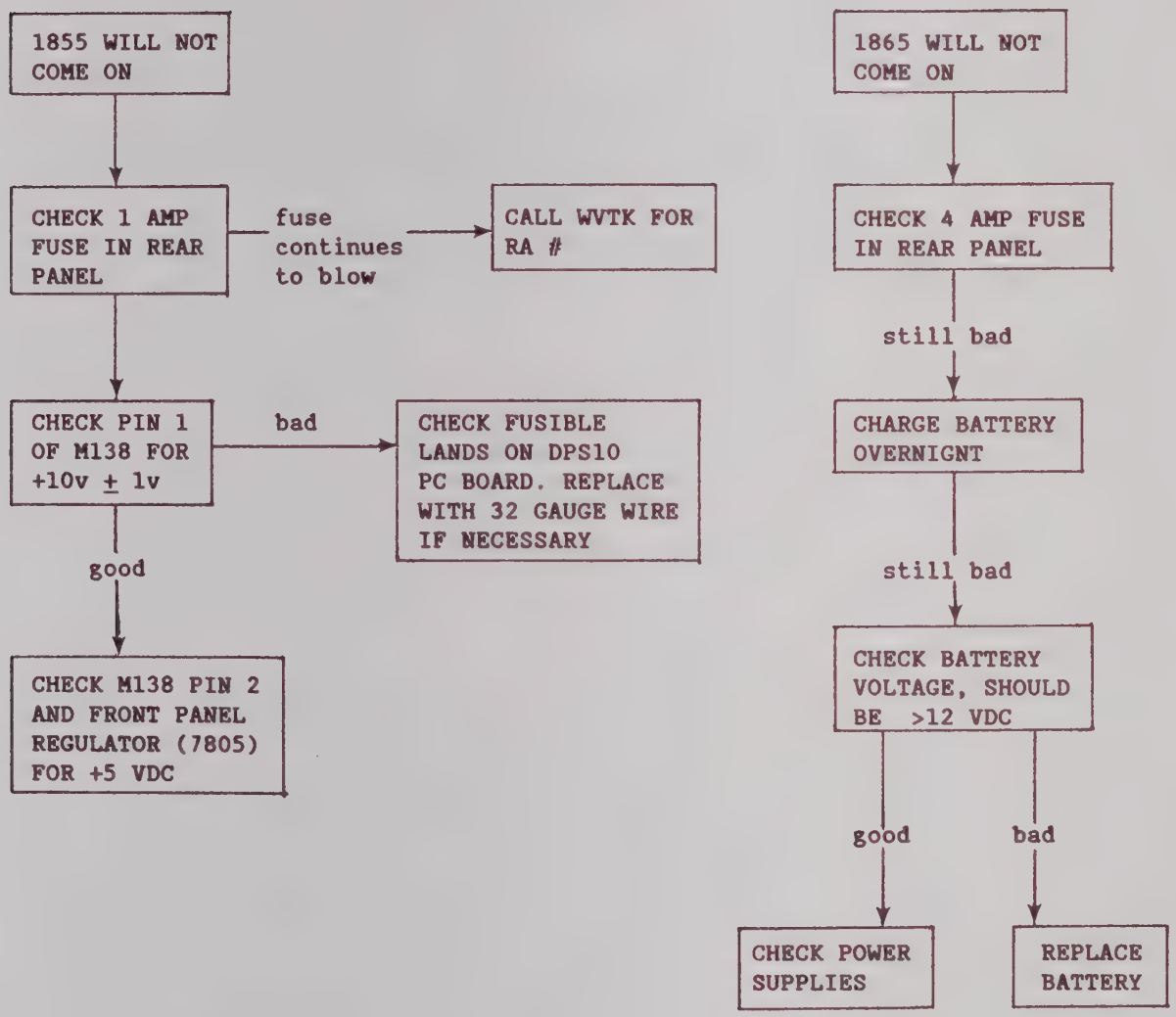

SECTION 5

PARTS LIST

1855B

		PAGE
CATV XMTR	1010-00-0167	5-2
CABLE ASSY, 4 ¾ IN	1217-70-0058	5-2
CABLE ASSY, 8 ½ IN	1217-70-0059	5-3
CABLE ASSY, 1 ¾ IN	1217-90-0028	5-4
LATCH CARD	1110-00-0160	5-5
RAMP CARD	1110-00-0180	5-6
UPROC BD	1110-00-9004	5-8
CHASSIS	1111-00-0090	5-10
LOOP COUNTER, M138	1114-00-0266	5-11
PC ASSY, M138	1218-00-0490	5-12
SWP OSC, M9L-1	1114-00-0310	5-13
M9L-1 MODULE ASSY	1216-40-0012	5-16
SUMMING OUTPUT AMP, M171	1114-00-0348	5-17
PC ASSY, M171	1218-00-1350	5-18
PSK MODULATOR, M135-50	1114-00-0355	5-21
PC ASSY, M135-50	1218-00-0470	5-22
POWER SUPPLY,DPS10	1115-00-0017	5-25
PC ASSY, DPS10	1218-00-0170	5-26
LINE CORD ASSY,DPS10	1219-40-0013	5-28
FRONT PANEL	1118-00-0045	5-29
FRONT PANEL PC	1218-00-0550	5-30
PWR SWITCH, 16 ½	1212-00-0011	5-31
MAIN BD 1	1218-00-0530	5-32
MAIN BD 2	1218-00-0540	5-33
HARNESS,1855	1219-00-0160	5-34

REFERENCE DESIGNATORS	PART DESCRIPTION	>< ORIG-MFGR-PART-NO	MFGR	WAVETEK NO.	QTY
01	CHASSIS, 1855	1855-CHAS	W-I	1111-00-0090	1.000
04	SUMMING OUTPUT AMP, M171	M171	W-I	1114-00-0348	1.000
05	SWP OSC, M9L-1	M9L-1	W-I	1114-00-0310	1.000
08	LOOP COUNTER, M138	M138	W-I	1114-00-0266	1.000
100	FRONT PANEL, 1855	1855-FP	W-I	1118-00-0045	1.000
400	LATCH CARD, 1855	1855-LATCH CD	W-I	1110-00-0160	1.000
500	RAMP CARD, 1855	1855-RAMP CD	W-I	1110-00-0180	1.000
W01	CABLE ASSY, 4 3/4 IN	WX1855-W1	W-I	1217-70-0058	1.000
W02	CABLE ASSY,8-1/2 IN	WX1855-W2	W-I	1217-70-0059	1.000
W04	CABLE ASSY, 1 3/4 IN	WX1855-W4	W-I	1217-90-0028	1.000
W05	CABLE ASSY,1-1/2IN	WX1855-W5	W-I	1217-90-0032	1.000

WAVETEK PARTS LIST	CATV XMTR,1855B	1010-00-0167 PAGE: 1	A REV

REFERENCE DESIGNATORS	PART DESCRIPTION	>< ORIG-MFGR-PART-NO	MFGR	WAVETEK NO.	QTY
1	CONN JF000-008	27-25	APL	2110-03-1004	2.000

WAVETEK PARTS LIST	CABLE ASSY, 4 3/4 IN	1217-70-0058 PAGE: 1	REV

REFERENCE DESIGNATORS	PART DESCRIPTION	ORIG-MFGR-PART-NO	MFGR	WAVETEK NO.	QTY
1	CONN,BNC,75,PANEL	28JS161-1	S-C	2110-01-1020	1.000
2	CONN JF000-008	27-25	APL	2110-03-1004	1.000

WAVETEK PARTS LIST	CABLE ASSY,8-1/2 IN	1217-70-0059 PAGE: 1	B REV

REFERENCE DESIGNATORS	PART DESCRIPTION	ORIG-MFGR-PART-NO	MFGR	WAVETEK NO.	QTY
1	CONNECTOR,SMC RA	37P121-1	S-C	2110-03-1005	2.000

WAVETEK PARTS LIST	CABLE ASSY, 1 3/4 IN	1217-90-0028 PAGE: 1	REV

REFERENCE DESIGNATORS	PART DESCRIPTION	ORIG-MFGR-PART-NO	MFGR	WAVETEK NO.	QTY
C401 C402	CAP,MON,50V,1UF	3420-050-E105M	AER	1510-11-3105	2.000
C403 C404 C405	CAP,DISC,100V,.15UF	CY20A154M	C-L	1510-11-1154	3.000
C406	CAP,ELEC,10V,150UF	157RSM025M	ICI	1510-20-8151	1.000
C407	CAP,DISC,1KV,150PF TAPE AND REEL	60U151M	MDC	1510-10-1151	1.000
C408	CAP,MICA,500V,560PF	DM-15-561J	ARC	1510-50-0561	1.000
IC401	PO VOLTAGE REG. STATIC SENSITIVE #2	UA7805UC	FCD	7000-78-0523	1.000
IC402 IC403 IC405 IC406 IC407 IC408	OCTAL D FLIP FLOP STATIC SENSITIVE	SN74LS273N	T-I	8007-42-7310	6.000
IC404	QUAD D FLIP-FLOP STATIC SENSITIVE	SN74LS175N	T-I	8007-41-7510	1.000
IC409	DCDR/DEMUXR STATIC SENSITIVE	SN74LS138N	T-I	8007-41-3810	1.000
IC410	QUAD NOR STATIC SENSITIVE	SN74LS02N	T-I	8000-74-0210	1.000
R401	RES,C,1/4W,5%,3.3K	CF1/4-3.3K	ASE	4700-15-3301	1.000
R402	RES,C,1/4W,5%,220	CF1/4-220	ASE	4700-15-2200	1.000

WAVETEK PARTS LIST	LATCH CARD, 1855	1110-00-0160 PAGE: 1	B REV

REFERENCE DESIGNATORS	PART DESCRIPTION	ORIG-MFGR-PART-NO	MFGR	WAVETEK NO.	QTY
C501 C502 C503 C504 C508 C509 C510 C511 C516 C517 C519 C520 C522 C523 C526 C527 C528 C529 C532 C533 C534	CAP,MON,50V,1UF	3420-050-E105M	AER	1510-11-3105	21.000
C505	CAP,FILM,50V,.22UF	F141A2203K050S	UNCAR	1510-61-0224	1.000
C506 C507	CAP,DISC,1KV,75PF	10TS-Q75	SPR	1510-10-1750	2.000
C512 C514	CAP,TANT,50V,.47UF	T310A474050AS	UNCAR	1510-21-9470	2.000
C513 C515	CAP,TANT,25V,10UF	100DE106M20C2	ACI	1510-21-7100	2.000
C518 C521 C524 C525	CAP,DISC,100V,.01UF TAPE AND REEL	68U103M	MDC	1510-10-2103	4.000
C530 C531	CAP,DISC,100V,.15UF	CY20A154M	C-L	1510-11-1154	2.000
IC501	COMPANDING DAC STATIC SENSITIVE	DAC-86CX	PMI	8000-00-8600	1.000
IC502	QUAD ANALOG SWITCH STATIC SENSITIVE	HI-201-5	HSD	8000-02-0100	1.000
IC503	IC,IL003-001 STATIC SENSITIVE #2	LF355N	NAT	7000-03-5500	1.000
IC504 IC505 IC511 IC513 IC514	DAC,8-BIT STATIC SENSITIVE	DAC-08EQ	AMD	8000-00-0800	5.000
IC506 IC515 IC516 IC519	OP AMP STATIC SENSITIVE #2	N5741CV	SIG	7000-57-4100	4.000
IC507 IC512	DUAL OP AMP,RAY ONLY STATIC SENSITIVE #2	RC4558NB-RAY	RAY	7000-45-5801	2.000
IC508	DUAL COMPARATOR STATIC SENSITIVE #2	LM393N	NAT	7000-03-9310	1.000
IC509	VOLT REG,+15V STATIC SENSITIVE #2	UA78M15UC	FCD	7000-78-1500	1.000
IC510	NEG VOLTAGE REG STATIC SENSITIVE #2	UA79M15AUC	FCD	7000-79-1500	1.000
IC518	VOLTAGE REFERENCE STATIC SENSITIVE #2	REF-02CJ	PMI	7000-00-0200	1.000
Q501	NPN,TO-92,GP AMP/SW F=300,V-40,Icex=50nA P=625mW,hFE=100,SS#2	2N3904	NAT	4901-03-9040	1.000
R501	RES,MF,1/8W,1%,9.09K	RN55D-9.09K	MILSP	4701-03-9091	1.000
R502	RES,MF,1/8W,1%,200	RN55D-200	MILSP	4701-03-2000	1.000
R503	RES,C,1/4W,5%,9.1K	CF1/4-9.1K	ASE	4700-15-9101	1.000
R504 R515 R516 R530 R534 R535 R537 R550 R551 R552 R554 R565 R567	RES,C,1/4W,5%,100	CF1/4-100	ASE	4700-15-1000	13.000
R505	RES,MF,1/8W,1%,100K	RN55D-100K	MILSP	4701-03-1003	1.000

REFERENCE DESIGNATORS	PART DESCRIPTION	ORIG-MFGR-PART-NO	MFGR	WAVETEK NO.	QTY
R506	RES,MF,1/8W,1%,2.26K	RN55D-2.26K	MILSP	4701-03-2261	1.000
R507 R526 R570	RES,C,1/4W,5%,2K	CF1/4-2K	ASE	4700-15-2001	3.000
R508 R509 R517 R518	RES,C,1/4W,5%,20	CF1/4-20	ASE	4700-15-2009	4.000
R510 R527 R528 R571	RES,C,1/4W,5%,10K	CF1/4-10K	ASE	4700-15-1002	4.000
R511 R513 R521 R556	RES,MF,1/8W,1%,4.99K	RN55D-4.99K	MILSP	4701-03-4991	4.000
R512 R514 R519 R538 R553 R569	RES,C,1/4W,5%,5.1K	CF1/4-5.1K	ASE	4700-15-5101	6.000
R520 R555	RES,C,1/4W,5%,510	CF1/4-510	ASE	4700-15-5100	2.000
R522 R557	RES,MF,1/8W,1%,499	RN55D-499	MILSP	4701-03-4990	2.000
R523 R525 R562	RES,MF,1/8W,1%,2K	RN55D-2K	MILSP	4701-03-2001	3.000
R524	RES,MF,1/8W,1%,12.8K	RN55D-12.8K	MILSP	4701-03-1282	1.000
R529	RES,C,1/4W,5%,4.7M	CB4755	A-B	4700-15-4704	1.000
R531 R544 R547	RES,MF,1/8W,1%,1.40K	RN55D-1.40K	MILSP	4701-03-1401	3.000
R532 R545 R548	RES,MF,1/8W,1%,1.1K	RN55D-1.1K	MILSP	4701-03-1101	3.000
R533 R546 R549	RES,C,1/4W,5%, 2.4K	CF1/4-2.4K	ASE	4700-15-2401	3.000
R536	RES,C,1/4W,5%,6.8K	CF1/4-6.8K	ASE	4700-15-6801	1.000
R539 R541	RES,C,1/4W,5%,3K	CF1/4-3K	ASE	4700-15-3001	2.000
R540	RES,C,1/4W,5%,3.3K	CF1/4-3.3K	ASE	4700-15-3301	1.000
R542	RES,C,1/4W,5%,220	CF1/4-220	ASE	4700-15-2200	1.000
R543	RES,C,1/4W,5%,20K	CF1/4-20K	ASE	4700-15-2002	1.000
R558 R559	RES,MF,1/8W,1%,1K	RN55D-1K	MILSP	4701-03-1001	2.000
R560	RES,MF,1/8W,1%,1.50K	RN55D-1.50K	MILSP	4701-03-1501	1.000
R561	RES,MF,1/8W,1%,11.3K	RN55D-11.3K	MILSP	4701-03-1132	1.000
R563	RES,C,1/4W,5%,3.9K	CF1/43.9K	ASE	4700-15-3901	1.000
R564 R568	TRM,CM,L,2K,10%,PC 15T,PN,CW,.250H,.19W ,75L,SA	89PR2K	BEK	4610-00-2202	2.000
R566	RES,C,1/4W,5%,560	CF1/4-560	ASE	4700-15-5600	1.000

REFERENCE DESIGNATORS	PART DESCRIPTION	ORIG-MFGR-PART-NO	MFGR	WAVETEK NO.	QTY
C201 C202 C205	CAP,DISC,100V,.01UF TAPE AND REEL	68U103M	MDC	1510-10-2103	3.000
C203 C204	CAP,MICA,500V,27PF	CM05ED270J03	ARC	1510-50-0270	2.000
C206 C208 C209 C213 C214	CAP,MON,50V,1UF	3420-050-E105M	AER	1510-11-3105	5.000
C207	CAP,DISC,1KV,470PF TAPE AND REEL	60U471M	MDC	1510-10-1471	1.000
C210 C211	CAP,ELEC,10V,150UF	157RSM025M	ICI	1510-20-8151	2.000
C212	CAP,TANT,25V,10UF	100DE106M20C2	ACI	1510-21-7100	1.000
IC201	UPROC W/CLK & RAM STATIC SENSITIVE	MC6802P	MOT	8000-68-0210	1.000
IC202	HEX INVERTER STATIC SENSITIVE	SN74LS04N	T-I	8000-74-0410	1.000
IC203 IC204	DCDR/DEMUXR STATIC SENSITIVE	SN74LS138N	T-I	8007-41-3810	2.000
IC205	ROM,MOD19,1855B,LEFT REF:8000-25-1610 $EF85 REV 0 STAT 2	8410-00-0017	W-I	8410-00-0017	1.000
IC206	ROM,MOD19,1855B,RHT. REF:8000-25-1610 $D821 REV 0 STAT 2	8410-00-0018	W-I	8410-00-0018	1.000
IC207	PGM TIMER STATIC SENSITIVE	MC6840P	MOT	8000-68-4010	1.000
IC208	OCTAL BFR/DRVR/RCVR STATIC SENSITIVE	SN74LS240N	T-I	8007-42-4010	1.000
IC209	DUAL COMPARATOR STATIC SENSITIVE #2	LM393N	NAT	7000-03-9310	1.000
IC210	8-IN POS NAND STATIC SENSITIVE	SN74LS30N	T-I	8000-74-3010	1.000
IC211	PO VOLTAGE REG. STATIC SENSITIVE #2	UA7805UC	FCD	7000-78-0523	1.000
IC212	OCTAL BUS XVR STATIC SENSITIVE	SN74LS245N	T-I	8007-42-4510	1.000
IC213	OCTAL BUF/LN DRVR STATIC SENSITIVE	SN74LS244N	T-I	8007-42-4410	1.000
IC214	HEX 3-STATE BUFFER STATIC SENSITIVE	8T95	SIG	8000-08-9510	1.000
P202	HEADER,3-PIN STRT REF:2112-07-0000	65501-403	BER	2112-07-0001	1.000
P203	HEADER,STRT,2 PIN REF:2112-07-0000	65501-402	BER	2112-07-0007	1.000
P204 P205	PGM DIP SHUNT	435704-8	AMP	2112-28-0001	2.000
P206	PGM DIP SHUNT, 7-POS	435704-7	AMP	2112-28-0005	1.000

REFERENCE DESIGNATORS	PART DESCRIPTION ><	ORIG-MFGR-PART-NO	MFGR	WAVETEK NO.	QTY
Q201	PNP,TO-92,GP AMP/SW F=300,V=40,Icex=50nA P=625mW,hFE=100,SS$2	2N3906	T-I	4901-03-9060	1.000
Q202	NPN,TO-92,GP AMP/SW F=300,V=40,Icex=50nA P=625mW,hFE=100,SS$2	2N3904	NAT	4901-03-9040	1.000
R201 R217	RES,C,1/4W,5%,3.3K	CF1/4-3.3K	ASE	4700-15-3301	2.000
R202 R203	RES NTWK,SIP,9-470K	109-474J	EPITK	4770-00-0011	2.000
R204 R205	RES NTWK,SIP,9-4.7K	109-472J	EPITK	4770-00-0014	2.000
R206	RES,MF,1/8W,1%,90.9K	RN55D-90.9K	MILSP	4701-03-9092	1.000
R207	RES,MF,1/8W,1%,13.0K	RN55D-13.0K	MILSP	4701-03-1302	1.000
R208	RES,MF,1/8W,1%,442K	RN55D-442K	MILSP	4701-03-4423	1.000
R209	RES,MF,1/8W,1%,110K	RN55D-110K	MILSP	4701-03-1103	1.000
R210 R211	RES,C,1/4W,5%,51K	CF1/4-51K	ASE	4700-15-5102	2.000
R212	RES,C,1/4W,5%,5.1K	CF1/4-5.1K	ASE	4700-15-5101	1.000
R213	RES,C,1/4W,5%,10K	CF1/4-10K	ASE	4700-15-1002	1.000
R214 R215	RES,1/8W,1%, 49.9K	RN55D-49.9K	MILSP	4701-03-4992	2.000
R216	RES,C,1/4W,5%,1M	CF1/4-1M	ASE	4700-15-1004	1.000
R218	RES,C,1/4W,5%,10M	CB1065	A-B	4700-15-1005	1.000
R219	RES,C,1/4W,5%,200K	CF1/4-200K	ASE	4700-15-2003	1.000
R220	RES,C,1/4W,5%,33K	CF1/4-33K	ASE	4700-15-3302	1.000
R221	RES,C,1/4W,5%,560K	CF1/4-560K	ASE	4700-15-5603	1.000
R222	RES,C,1/4W,5%,470K	CF1/4-470K	ASE	4700-15-4703	1.000
X201	CRYSTAL, 4 MHZ	MP040	CTS-E	2310-00-0451	1.000

REFERENCE DESIGNATORS	PART DESCRIPTION	ORIG-MFGR-PART-NO	MFGR	WAVETEK NO.	QTY
J501	PC EDGE CONN,12-CKT	031-06134-200	TEKA	2112-27-0004	1.000
NONE	SUP BRKT PER B/P	1410-30-1180	W-I	1410-30-1180	1.000

REFERENCE DESIGNATORS	PART DESCRIPTION	ORIG-MFGR-PART-NO	MFGR	WAVETEK NO.	QTY
C03	CAP,TANT,25V,1UF	100DE105K25A2	ACI	1510-21-7010	1.000
C04	CAP,ELEC,6.3V,100UF	501D107F016MM	SPR	1510-21-1101	1.000
C06 C11	CAP,MON,50V,1UF	3420-050-E105M	AER	1510-11-3105	2.000
C18	CAP,DISC,100V,.15UF	CY20A154M	C-L	1510-11-1154	1.000
IC01	VOLT REG,+5V STATIC SENSITIVE #2	78M05U1C	FCD	7000-78-0500	1.000
L01 L02 L06 L08	TOROID,10T,1-1/4L	LA009-010-1	W-I	1810-05-0004	4.000
L03	TOROID,10T,1-1/2L	LA009-010-2	W-I	1810-05-0005	1.000

REFERENCE DESIGNATORS	PART DESCRIPTION	ORIG-MFGR-PART-NO	MFGR	WAVETEK NO.	QTY
C07 C08 C16	CAP,DISC,100V,.01UF TAPE AND REEL	68U103M	MDC	1510-10-2103	3.000
C12 C13 C15	CAP,MON,50V,1UF	3420-050-E105M	AER	1510-11-3105	3.000
C17	CAP,DISC,100V,.15UF	CY20A154M	C-L	1510-11-1154	1.000
CR01 CR02 CR03 CR04	DIODE,SCHOTTKY,LOW OFFSET AXIAL,V=5V CT=1.0pF,SS#1	5082-2835	H-P	4809-02-0002	4.000
IC02	DIVIDE-BY-10, ECL STATIC SENSITIVE	11C90DC	FCD	8000-11-9000	1.000
IC03	UP/DN COUNTER STATIC SENSITIVE	SN74S169	T-I	8007-41-6900	1.000
L04 L05 L07	TOROID,4T,1-1/4L	LA009-004-1	W-I	1810-05-0003	3.000
L09	COL,AIR,5 1/2T,200ID	6T,PER SPEC.	ATR	1815-00-0004	1.000
L10	TOROID,10T,1L	LA009-010-3	W-I	1810-05-0006	1.000
Q01	NPN,TO-72,GP AMP F=60,V=12,Iceo=.02uA P=200mW,NF=4.5,SS#2	2N5179-MOT	MOT	4901-05-1791	1.000
R01 R04	RES,C,1/4W,5%,1.2K	CF1/4-1.2K	ASE	4700-15-1201	2.000
R02	RES,C,1/4W,5%,5.1K	CF1/4-5.1K	ASE	4700-15-5101	1.000
R05 R06	RES,C,1/4W,5%,3K	CF1/4-3K	ASE	4700-15-3001	2.000
R07	RES,C,1/4W,5%,110	CF1/4-110	ASE	4700-15-1100	1.000
R08	RES,C,1/8W,5%,240	CF1/8-240	ASE	4700-05-2400	1.000
R09	RES,C,1/4W,5%,1K	CF1/4-1K	ASE	4700-15-1001	1.000
R10 R11	RES,C,1/8W,5%,33	CF-1/8-33	ASE	4700-05-3309	2.000
R12	RES,C,1/8W,5%,20K	CF1/8-20K	ASE	4700-05-2002	1.000

REFERENCE DESIGNATORS	PART DESCRIPTION	ORIG-MFGR-PART-NO	MFGR	WAVETEK NO.	QTY
10	TUBE	A000-694	W-I	1410-00-1360	1.000
14	INDUCTOR STRAP	A000-743	W-I	1410-00-1580	1.000
20	FERR. BEAD,LC000-009	K5-001-00/3B	FRXC	1813-00-0007	2.000
C04 C20	CAP,DISC,1KV,100PF	CN1500-100PF	RMC	1510-10-5101	2.000
C7	CAP,DISC,1KV,.001UF TAPE AND REEL	5GAD10	SPR	1510-10-1102	1.000
C08	CAP,COMP,500V,.75PF	QC-.75PF	Q-C	1510-40-0758	1.000
C09 C12 C15	CAP,TANT,50V,.47UF	T310A474050AS	UNCAR	1510-21-9470	3.000
C10	CAP,COMP,500V,.47PF TAPE AND REEL	MC-.47PF	Q-C	1510-40-1478	1.000
C14*	CAP,COMP,500V,2.4PF	QC-2.4PF	Q-C	1510-40-0249	1.000
C16*	CAP,COMP,500V,.27PF	MC-.27PF	Q-C	1510-40-1278	1.000
C24 C26	CAP,TANT,25V,10UF	100DE106M20C2	ACI	1510-21-7100	2.000
C27 C30	CAP,DISC,100V,.01UF TAPE AND REEL	68U103M	MDC	1510-10-2103	2.000
C28	CAP,VALUE DETERMINED IN CALIBRATION	CAP,TRIM	W-I	1519-99-9999	1.000
C32*	CAP,COMP,500V,3.9PF	QC-3.9PF	Q-C	1510-40-0399	1.000
C34	CAP,MON,50V,1UF	3420-050-E105M	AER	1510-11-3105	1.000
C36 C37	CAP,TANT,25V,1UF	100DE105K25A2	ACI	1510-21-7010	2.000
CR01 CR02 CR03 CR07 CR08	DIODE,VAR CAP,TUNER DO-35,V=30V,IR=50nA CT=2.3pF,SS*2	BB121A	ITT	4889-00-0001	5.000
CR04 CR05	DIODE,SCHOTTKY,LOW OFFSET AXIAL,V=5V CT=1.0pF,SS*1	5082-2835	H-P	4809-02-0002	2.000
CR06 CR09	DIODE,ZENER,1W,GP DO-41,V=6.8,IT=37mA IF=133mA,+/-5%,SS*2	1N4736A	MOT	4801-02-0001	2.000
L01 L03	CHOKE,COATED,0.22UH 10%,D=0.120IN L=0.300,I=1025MA	09CR22K	JEF	1810-03-0228	2.000
L02 L10	CHOKE,8T,32 GA FROM:4705-16-4701	1210-33-0001	W-I	1210-33-0001	2.000
L04 L11	RF CHOKE,REF ONLY	CHOKE	W-I	1819-99-9999	2.000
L05	WIRE,MGNT,32GA,GN	8056-GN	BEL	6010-73-2000	1.000
L09	CHOKE,COATED,1UH,10% D=0.120IN,L=0.300IN, I=385MA	08N1R0	JEF	1810-03-0010	1.000
L12 L18	TOROID,4T,1-1/4L	LA009-004-1	W-I	1810-05-0003	2.000

REFERENCE DESIGNATORS	PART DESCRIPTION	ORIG-MFGR-PART-NO	MFGR	WAVETEK NO.	QTY
L13	CHOKE,COATED,4.7UH 10%,D=0.120IN L=0.300IN,I=230MA	08N4R7	JEF	1810-03-0479	1.000
L14 L15 L16 L17	TOROID,10T,1-1/4L	LA009-010-1	W-I	1810-05-0004	4.000
Q01 Q08	PNP,TO-92,Amplifier F=100,V=25,Icbo=100n P=625mW,hFE=300,SS#2	MPS3702	NAT	4902-03-7020	2.000
Q02	NPN,TO-72,AMP F=1.6G,V=10,Icbo=50n P=250m,hFE=25,SS#2	A430	APX	4902-00-4300	1.000
Q03 Q05 Q06 Q13 BOU 4610-00-1103	NPN,TO-72,UHF AMP VCBO=15V,IC=25mA 2.000 1T,PN,CW,.375H,.200W .375L,SA	2N5053	APX	4901-05-0530	4.000
R04 R30	RES,C,1/4W,5%,680	CF1/4-680	ASE	4700-15-6800	2.000
R05 R06 R19 R31 R32 R38	RES,C,1/4W,10%,4.7K RC104-247AB	CB4721	A-B	4705-16-4701	6.000
R07 R33	RES,C,1/4W,5%,10	CF1/4-10	ASE	4700-15-1009	2.000
R08	RES,C,1/4W,5%,5.6K	CF1/4-5.6K	ASE	4700-15-5601	1.000
R09	TRM,CM,L,20K,10%,PC 1T,PN,CW,.375H,.200W .375L,SA	3386S-1-203	BOU	4610-00-1203	1.000
R10	RES,C,1/4W,5%,47K	CF1/4-47K	ASE	4700-15-4702	1.000
R11	RES,C,1/4W,5%,4.7	CF1/4-4.7	ASE	4700-15-4708	1.000
R12	RES,C,1/4W,5%,390	CF1/4-390	ASE	4700-15-3900	1.000
R13 R21 R34 R35 R39	RES,C,1/4W,5%,100	CF1/4-100	ASE	4700-15-1000	5.000
R14 R17 R36 R37	RES,C,1/4W,5%,470	CF1/4-470	ASE	4700-15-4700	4.000
R18 R20 R40	RES,C,1/4W,5%,47	CF1/4-47	ASE	4700-15-4709	3.000
R24	RES,C,1/4W,5%,7.5K	CF1/4-7.5K	ASE	4700-15-7501	1.000

REFERENCE DESIGNATORS	PART DESCRIPTION	ORIG-MFGR-PART-NO	MFGR	WAVETEK NO.	QTY
R25	RES,C,1/4W,5%,33K	CF1/4-33K	ASE	4700-15-3302	1.000
R26	RES,C,1/4W,5%,4.7K	CF1/4-4.7K	ASE	4700-15-4701	1.000
R29	RES,C,1/4W,5%,2.2K	CF1/4-2.2K	ASE	4700-15-2201	1.000
R41	RES,C,1/4W,5%,150	CF1/4-150	ASE	4700-15-1500	1.000
R42	RES,C,1/4W,5%,22	CF1/4-22	ASE	4700-15-2209	1.000
R43	RES,C,1/4W,5%,10M	CB1065	A-B	4700-15-1005	1.000
R44	RES,C,1/4W,5%,15M	CB1565	A-B	4700-15-1505	1.000

REFERENCE DESIGNATORS	PART DESCRIPTION	ORIG-MFGR-PART-NO	MFGR	WAVETEK NO.	QTY
1	MODULE CHASSIS,M9L-1 FROM:1410-00-3360 PER B/P	1414-30-1022	W-I	1414-30-1022	1.000
2	MODULE BASE,M9L-1 FROM:3210-08-0033 PER B/P	1414-30-1021	W-I	1414-30-1021	1.000
3	INDEX STUD	A001-009	W-I	1410-00-2680	1.000
4	CLOVERLEAF FTE-12 HT101-000	011-6808-000-59-9	SEL	2112-18-0001	25.000
6	NUT,6-32X1/4HN101-600	8005NP	F-S	2810-14-6100	2.000
7	INT,LOWASHER,6 HW101-600	1304ZP	F-S	2810-24-6000	2.000
8	COMPART BOX	A001-313	W-I	1410-00-3800	1.000
9	COMPARTMENT WALL	A001-312	W-I	1410-00-3790	2.000
11	SCW,SBH,6-32X1/4	6-32X1/4,UC,BH,NP	S-S	2810-17-6104	1.000
12	COVER,SMALL	A000-693	W-I	1410-00-1359	2.000
13	GROUND STRAP FROM:3210-99-0024	A000-671	W-I	1410-00-1229	2.000
C01 C33	CAP,FT,500V,6.8PF	54-794-010-X5E0-689M	SPEC	1510-30-1689	2.000
C02 C05 C11 C13 C17 C18 C19 C21 C29 C31	CAP,FT,250V,500PF	4420-500PF	AER	1510-30-3501	10.000
C03 C06 C22	CAP,FT,250V,100PF	4420-100PF	AER	1510-30-3101	3.000
C23 C25	CAP,FT,500V,470PF	54-794-010-X5R0-471M	SPEC	1510-30-0471	2.000
J01 J02	CONN JF000-005	37JR116-1	S-C	2110-03-0002	2.000
R23	POT,CC,L,20K,20%,PL 1T,LG,CW,.500D,.469T .25B,.125SD,.50SL	WA2G032S-203MA	A-B	4610-10-7203	1.000

WAVETEK PARTS LIST	M9L-1 MODULE ASSY	1216-40-0012 PAGE: 1	B REV

REFERENCE DESIGNATORS	PART DESCRIPTION	ORIG-MFGR-PART-NO	MFGR	WAVETEK NO.	QTY
2	COVER,M171 FROM:3210-08-0036	1414-30-1031	W-I	1414-30-1031	1.000
4	DECAL,CAN,M171	CDB-230	W-I	2410-04-0447	1.000
5	WASHER,L,SPLIT,8	31-101	F-S	2810-28-0057	1.000
C13	CAP.,CHIP,360PF,10%	100B361KP200X	ATC	1510-00-2361	1.000
C15 C17	CAP,CHIP,.1 UF TAPE AND REEL	51C1209-B104Z	CFI	1510-00-3104	2.000
C16	CAP,CHIP,47PF TAPE AND REEL	C1005C470J2GAH	UNCAR	1510-00-5470	1.000
C26	CAP,DISC,1KV,.003UF TAPE AND REEL	5GA-D30	SPR	1510-10-1302	1.000
Q01	TRANS QB000-034 STATIC SENSITIVE #2	BFR94	APX	4902-00-0940	1.000
R33	RES,C,1/4W,5%,15	CF1/4-15	ASE	4700-15-1509	1.000
R46	RES,C,1/4W,5%,68	CF1/4-68	ASE	4700-15-6809	1.000

REFERENCE DESIGNATORS	PART DESCRIPTION	ORIG-MFGR-PART-NO	MFGR	WAVETEK NO.	QTY
3	IC SKT,8 PIN	DILB-8P-108	BURNDY	2112-00-0007	2.000
C01 C02 C03 C04 C05 C06 C08 C09 C10 C11 C27	CAP,CER,25V,.022UF	HY-525	SPR	1510-11-9223	11.000
C07 C18	CAP,MON,50V,1UF	3420-050-E105M	AER	1510-11-3105	2.000
C12	CAP,DISC,1KV,200PF TAPE AND REEL	CCD-201	ARC	1510-10-1201	1.000
C14	CAP,DISC,1KV,47PF TAPE AND REEL	60U2J470J	MDC	1510-10-3470	1.000
C19	CAP,MICA,500V,470PF	DM15-471J	ARC	1510-50-0471	1.000
C20	CAP,MICA,500V,.001UF	DM15-102J	ARC	1510-50-0102	1.000
CR01 CR02 CR03 CR09 CR10	DIODE,PIN,GP SWIT AXIAL,V=100V CT=0.4pF,SS#2	5082-3080	H-P	4805-02-0002	5.000
CR04 CR06 CR07	DIODE,SWITCHING,VHF DO-34,V=35,IF=100mA CT=0.8pF,SS#2	BA482	APX	4812-02-0004	3.000
CR05 CR08	DIODE,FAST SWIT,DET AXIAL,V=200V,IO=160m SUR I=250mA,SS#2	MPN3401	MOT	4805-02-0006	2.000
CR11	DIODE,HOT CARR,GP AXIAL,V=70V IR=200nA IR=100nA,CT=1pF,SS#1	5082-2800	H-P	4809-02-0001	1.000
CR12	DIODE,SIGNAL,GP AXIAL,V=75V,IO=10mA CT=4pF,SS#2	1N914	G-E	4807-01-0914	1.000
IC01	RF AMP,WIDE BAND,400 MHZ,55 MA DC STATIC SENSITIVE #2	MWA120	MOT	7000-01-2000	1.000
IC02	RF AMP,WIDE BAND,400 MHZ,100 MA DC STATIC SENSITIVE #2	MWA130	MOT	7000-01-3000	1.000
IC03 IC04	DUAL OP AMP STATIC SENSITIVE #2	TL082CP	T-I	7000-00-8200	2.000
L01 L02 L03 L04 L05 L06	TOROID,10T,1L	LA009-010-3	W-I	1810-05-0006	6.000
L07	CHOKE,COATED,39UH 10%,D=0.120IN, L=0.300,I=125MA	09C390K	JEF	1810-03-0390	1.000
L08	COIL,AIR,3-1/2 T.	1815-00-0042	W-I	1815-00-0042	1.000
L09	COIL,1-1/2T,.2 ID, PER B/P	1815-00-0024	W-I	1815-00-0024	1.000
Q02	JFET-P,TO-92,GP AMP AUDIO,V=40,Igss=5nA P=310mW,NF=2.5,SS#1	2N5461	MOT	4901-05-4610	1.000
R01	RES,C,1/8W,5%,560	CF 1/8-560	ASE	4700-05-5600	1.000

REFERENCE DESIGNATORS	PART DESCRIPTION	ORIG-MFGR-PART-NO	MFGR	WAVETEK NO.	QTY
R02	RES,1/8W,5,330	CF1/8-330	ASE	4700-05-3300	1.000
R03 R43	RES,C,1/4W,5%,1K	CF1/4-1K	ASE	4700-15-1001	2.000
R04	RES,C,1/8W,5%,10	CF1/8-10	ASE	4700-05-1009	1.000
R05 R13	RES,C,1/4W,5%,10	CF1/4-10	ASE	4700-15-1009	2.000
R06	RES,C,1/4W,5%,330	CF1/4-330	ASE	4700-15-3300	1.000
R07	RES,C,1/4W,5%,47	CF1/4-47	ASE	4700-15-4709	1.000
R08	RES,C,1/4W,5%,91K	CF1/4-91K	ASE	4700-15-9102	1.000
R09 R17 R20	RES,C,1/4W,5%,5.1K	CF1/4-5.1K	ASE	4700-15-5101	3.000
R10	RES,C,1/4W,5%,15K	CF1/4-15K	ASE	4700-15-1502	1.000
R11 R12	RES,C,1/4W,5%,100	CF1/4-100	ASE	4700-15-1000	2.000
R14 R30	RES,C,1/4W,5%,2K	CF1/4-2K	ASE	4700-15-2001	2.000
R15 R35	RES,C,1/8W,5%,68	CF1/8-68	ASE	4700-05-6809	2.000
R16	RES,C, 1/8W,5%, 5.1K	CF 1/8 -5.1 K	ASE	4700-05-5101	1.000
R19	RES,C,1/8W 5% 470	CF1/8-470	ASE	4700-05-4700	1.000
R21	RES,C,1/4W,5%,24K	CF1/4-24K	ASE	4700-15-2402	1.000
R22 R23	RES,C,1/4W,5%,1.5K	CF1/4-1.5K	ASE	4700-15-1501	2.000
R24	RES,C,1/8W,5%,33	CF-1/8-33	ASE	4700-05-3309	1.000
R25	RES,C,1/8W,5%,47	CF1/8-47	ASE	4700-05-4709	1.000
R26	RES,C,1/8W,5%,1.8K	CF1/8-1.8K	ASE	4700-05-1801	1.000
R27	RES,C,1/8W,5%,15	CF-1/8-15	ASE	4700-05-1509	1.000
R28	TRM,CM,L,500,10%,PC 15T,PN,CW,.250H,.19W .75L,SA	89PR500	BEK	4610-00-2501	1.000
R29	RES,C,1/4W,5%,120	CF1/4-120	ASE	4700-15-1200	1.000
R31 R32	RES,C,1/4W,5%,1.2K	CF1/4-1.2K	ASE	4700-15-1201	2.000
R34	RES,C,1/4W,5%,270	CF1/4-270	ASE	4700-15-2700	1.000
R36	RES,C,1/8W,5%,6.2K	BB6225	A-B	4700-05-6201	1.000
R37	RES,C,1/8W,5%,1K RC101-210	CF1/8-1K	ASE	4700-05-1001	1.000
R38	RES,C,1/4W,5%,12K	CF1/4-12K	ASE	4700-15-1202	1.000
R39 R42	TRM,CM,L,20K,10%,PC 15T,PN,CW,.250H,.19W .75L,SA	89PR20K	BEK	4610-00-2203	2.000
R40	RES,C,1/4W,5%,4.7K	CF1/4-4.7K	ASE	4700-15-4701	1.000
R41	RES,C,1/4W,5%,75K	CF1/4-75K	ASE	4700-15-7502	1.000

REFERENCE DESIGNATORS	PART DESCRIPTION	ORIG-MFGR-PART-NO	MFGR	WAVETEK NO.	QTY
R44	RES,C,1/4W,5%,10K	CF1/4-10K	ASE	4700-15-1002	1.000
R45	RES,C,1/4W,5%,1M	CF1/4-1M	ASE	4700-15-1004	1.000

REFERENCE DESIGNATORS	PART DESCRIPTION	ORIG-MFGR-PART-NO	MFGR	WAVETEK NO.	QTY
CR09 CR10	DIODE,RECT,GP DO-15,V=400V,IO=1.0A SUR I=30A,SS#2	1N4004	P-C	4806-01-4004	2.000
J02 J03	PV JUMPER	65474-002	BER	2112-10-0002	2.000
L01 L02	TOROID,10T	LA009-010	W-I	1810-05-0002	2.000
L10	COIL,AIR,8T,.200 ID	8T,PER SPEC.	ATR	1815-00-0005	1.000
MX01	MIXER,DBL.BALANCED	CM-1	VARIL	3010-54-0001	1.000
R53	RES,C,1/8W,5%,27	BB 2705	A-B	4705-05-2709	1.000
R57 R58	RES,C,1/8W,5%,430	BB4315	A-B	4705-05-4300	2.000
X1	CRYSTAL,50.00000 MHZ	X33W-50.00000	W-I	2310-00-0561	1.000

REFERENCE DESIGNATORS	PART DESCRIPTION	ORIG-MFGR-PART-NO	MFGR	WAVETEK NO.	QTY
C03 C04 C17 C18	CAP,MON,50V,1UF	3420-050-E105M	AER	1510-11-3105	4.000
C07 C08 C12 C27	CAP,DISC,1KV,10PF TAPE AND REEL	10TCC-Q10	SPR	1510-10-0100	4.000
C09 C10 C11 C28 C29	CAP,DISC,1KV,.001UF TAPE AND REEL	5GAD10	SPR	1510-10-1102	5.000
C13 C23 C26	CAP,DISC,1KV,47PF TAPE AND REEL	10TCC-Q47	SPR	1510-10-0470	3.000
C14	CAP,DISC,1KV,120PF TAPE AND REEL	60U121M	MDC	1510-10-1121	1.000
C16	CAP,TANT,25V,10UF	100DE106M20C2	ACI	1510-21-7100	1.000
C19 C20	CAP,DISC,1KV,470PF TAPE AND REEL	60U471M	MDC	1510-10-1471	2.000
C21	CAP,DISC,1KV,33PF TAPE AND REEL	10TCC-Q33	SPR	1510-10-0330	1.000
C22	CAP,COMP,500V,3PF	QC-3PF	Q-C	1510-40-0030	1.000
C24 C25	CAP,DISC,100V,.01UF TAPE AND REEL	68U103M	MDC	1510-10-2103	2.000
CR01 CR07	DIODE,SIGNAL,GP AXIAL,V=75V,IO=10mA CT=4pF,SS#2	1N914	G-E	4807-01-0914	2.000
CR02 CR03	DIODE,SCHOTTKY,LOW OFFSET AXIAL,V=5V CT=1.0pF,SS#1	5082-2835	H-P	4809-02-0002	2.000
CR04 CR05 CR06	DIODE,PIN,GP SWIT AXIAL,V=200V CT=0.3pF,SS#2	MA47047	M-A	4805-02-0003	3.000
CR08	DIODE,RECT,GP DO-15,V=400V,IO=1.0A SUR I=30A,SS#2	1N4004	P-C	4806-01-4004	1.000
IC01	OP AMP STATIC SENSITIVE #2	N5741CV	SIG	7000-57-4100	1.000
L03 L06	TOROID,10T,1L	LA009-010-3	W-I	1810-05-0006	2.000
L04	COIL,AIR,14T,.200 ID	14T,PER SPEC.	ATR	1815-00-0008	1.000
L05 L11	COIL,AIR,3T,.200 ID	3T,PER SPEC.	ATR	1815-00-0002	2.000
L07	COIL,AIR,10T,.200 ID	10T,PER SPEC.	ATR	1815-00-0007	1.000
L08	COIL,AIR,4T,.200 ID	4T,PER SPEC.	ATR	1815-00-0003	1.000
L09	COL,AIR,5 1/2T.200ID	6T,PER SPEC.	ATR	1815-00-0004	1.000
L12	CHOKE,COATED,47UH 10%,D=0.120IN L=0.300,I=110MA	08N470	JEF	1810-03-0470	1.000
L13	COIL,AIR,8T,.200 ID	8T,PER SPEC.	ATR	1815-00-0005	1.000

REFERENCE DESIGNATORS	PART DESCRIPTION	ORIG-MFGR-PART-NO	MFGR	WAVETEK NO.	QTY
P02 P03	HEADER,STRT,2 PIN REF:2112-07-0000	65501-402	BER	2112-07-0007	2.000
Q01 Q03	NPN,TO-92,GP AMP/SW F=300,V=40,Icex=50nA P=625mW,hFE=100,SS#2	2N3904	NAT	4901-03-9040	2.000
Q02 Q04	PNP,TO-92,GP AMP/SW F=250,V=40,Icex=50nA P=625mW,hFE=50,SS#2	2N3905	NAT	4901-03-9050	2.000
Q05 Q06	NPN,TO-72,UHF AMP VCBO=15V,IC=25mA P=200mW,hFE=25,SS#2	2N5053	APX	4901-05-0530	2.000
R01	RES,C,1/4W,5%,1.5K	CF1/4-1.5K	ASE	4700-15-1501	1.000
R02 R11 R34 R44	RES,C,1/4W,5%,1K	CF1/4-1K	ASE	4700-15-1001	4.000
R03 R05	RES,C,1/4W,5%,27K	CF1/4-27K	ASE	4700-15-2702	2.000
R04	RES,C,1/4W,5%,3K	CF1/4-3K	ASE	4700-15-3001	1.000
R06 R17	RES,C,1/4W,5%,15K	CF1/4-15K	ASE	4700-15-1502	2.000
R07	RES,C,1/4W,5%,430K	CF1/4-430K	ASE	4700-15-4303	1.000
R08	RES,C,1/4W,5%,82	CF1/4-82	ASE	4700-15-8209	1.000
R09 R13 R37 R45 R46	RES,C,1/4W,5%,10	CF1/4-10	ASE	4700-15-1009	5.000
R10 R12 R14	RES,C,1/4W,5%,2K	CF1/4-2K	ASE	4700-15-2001	3.000
R15 R32	RES,C,1/4W,5%,100	CF1/4-100	ASE	4700-15-1000	2.000
R16 R28	RES,C,1/4W,5%,9.1K	CF1/4-9.1K	ASE	4700-15-9101	2.000
R18 R35 R48	RES,C,1/4W,5%,6.8K	CF1/4-6.8K	ASE	4700-15-6801	3.000
R19 R29	TRM,CM,L,10K,10%,PC 15T,PN,CW,.250W,.19W .75L,SA	89PR10K	BEK	4610-00-2103	2.000
R20	RES,C,1/4W,5%,39K	CF1/4-39K	ASE	4700-15-3902	1.000
R21 R36 R51	RES,C,1/4W,5%,470	CF1/4-470	ASE	4700-15-4700	3.000
R22	RES,C,1/8W,5%,33	CF-1/8-33	ASE	4700-05-3309	1.000
R23 R25 R41 R42	RES,C,1/4W,5%,200	CF1/4-200	ASE	4700-15-2000	4.000
R24	RES,C,1/4W,5%,62	CF1/4-62	ASE	4700-15-6209	1.000
R26 R27	RES,C,1/8W,5%,150	CF1/8-150	ASE	4700-05-1500	2.000
R30	RES,C,1/4W,5%,20K	CF1/4-20K	ASE	4700-15-2002	1.000
R31	RES,C,1/4W,5%,10K	CF1/4-10K	ASE	4700-15-1002	1.000
R33 R47	RES,C,1/4W,5%,100K	CF1/4-100K	ASE	4700-15-1003	2.000
R38	RES,C,1/4W,5%,2.2K	CF1/4-2.2K	ASE	4700-15-2201	1.000
R39 R40 R52	RES,C,1/4,5%,27	CF1/4-27	ASE	4700-15-2709	3.000

REFERENCE DESIGNATORS	PART DESCRIPTION	ORIG-MFGR-PART-NO	MFGR	WAVETEK NO.	QTY
R43	RES,C,1/4W,5%,330	CF1/4-330	ASE	4700-15-3300	1.000
R49	RES,C,1/4W,5%,390	CF1/4-390	ASE	4700-15-3900	1.000
R50	RES,C,1/4W,5%,68	CF1/4-68	ASE	4700-15-6809	1.000
T01 T02	RF XFMR FROM:1813-00-0008	1210-41-0007	W-I	1210-41-0007	2.000

REFERENCE DESIGNATORS	PART DESCRIPTION	ORIG-MFGR-PART-NO	MFGR	WAVETEK NO.	QTY
A01	PC ASSY,DPS10	DPS10-PC	W-I	1218-00-0170	1.000
A02	LINE CORD ASSY,DPS10	1219-40-0013	W-I	1219-40-0013	1.000
F01	FUSE,SLO BLO,1 AMP, 250V	MDL-1	BUS	2410-05-0005	1.000
Q03 Q04	PROT PWR DARLINGTON STATIC SENSITIVE #2	LM395T	NAT	4902-00-3950	2.000
S01	SWITCH,SLIDE,DPDT	4021.0512	MARQ	5105-00-0011	1.000

WAVETEK PARTS LIST	POWER SUPPLY,DPS10	1115-00-0017 PAGE: 1	I REV

REFERENCE DESIGNATORS	PART DESCRIPTION	ORIG-MFGR-PART-NO	MFGR	WAVETEK NO.	QTY
1	IC SKT,8 PIN	DILB-8P-108	BURND	2112-00-0007	1.000
C01 C08	CAP,ELEC,50V,1500UF	WBR1500-50	C-D	1510-20-1152	2.000
C02 C06	CAP,DISC,100V,.005UF TAPE AND REEL	TG-D50	SPR	1510-10-2502	2.000
C03 C09	CAP,ELEC,25V,100UF TAPE AND REEL	TE1211	SPR	1510-20-4101	2.000
C04 C05 C07	CAP,TANT,25V,1UF	100DE105K25A2	ACI	1510-21-7010	3.000
C10 C11	CAP,ELEC,16V,10000UF	D76381	SPR	1510-21-4103	2.000
CR01	DIODE,RECT BRDG,GP 312-02,V=100V,IO=1A SUR I=30A,SS#2	MDA101	MOT	4806-02-0003	1.000
CR02 CR03	DIODE,RECTR BRDG,GP 117A-02,V=100,IO=4A SUR I=100A,SS#2	MDA970-2	MOT	4806-02-0004	2.000
CR04 CR06	DIODE,SIGNAL,GP AXIAL,V=75V,IO=10mA CT=4pF,SS#2	1N914	G-E	4807-01-0914	2.000
CR05 CR07	DIODE,RECT,GP DO-15,V=400V,IO=1.0A SUR I=30A,SS#2	1N4004	P-C	4806-01-4004	2.000
IC01	VOLTAGE REFERENCE STATIC SENSITIVE #2	REF-02CJ	PMI	7000-00-0200	1.000
IC02	DUAL OP AMP STATIC SENSITIVE #2	TL082CP	T-I	7000-00-8200	1.000
J03 J04	CONN.,RECEPT.,3-PIN	6-86105-3	AMP	2112-25-0001	2.000
P01 P02	7-PIN LOCKING PLUG	09-65-1071	MOL	2112-05-0007	2.000
Q01	JFET-N,TO-92,AUD AMP VGS=40,IDSS=10mA P=350mW,SS#1	E232	SCX	4902-00-2320	1.000
Q02	PNP,TO-92,GP AMP/SW F=300,V=40,Icex=50nA P=625mW,hFE=100,SS#2	2N3906	T-I	4901-03-9060	1.000
R01	RES,C,1/4W,5%,1K	CF1/4-1K	ASE	4700-15-1001	1.000
R02	RES,C,1/4W,5%,39K	CF1/4-39K	ASE	4700-15-3902	1.000
R03	RES,MF,1/8W,1%,4.87K	RN55D-4.87K	MILSP	4701-03-4871	1.000
R04 R08	TRM,CM,L,200,10%,PC 15T,PN,CW,.250H,.19W .75L,SA	89PR200	BEK	4610-00-2201	2.000
R05	RES,C,1/4W,5%,3.9K	CF1/43.9K	ASE	4700-15-3901	1.000
R06	RES,MF,1/8W,1%,13.0K	RN55D-13.0K	MILSP	4701-03-1302	1.000
R07 R09	RES,MF,1/8W,1%,10K	RN55D-10K	MILSP	4701-03-1002	2.000

WAVETEK PARTS LIST	PC ASSY,DPS10	1218-00-0170 PAGE: 1	B REV

REFERENCE DESIGNATORS	PART DESCRIPTION	ORIG-MFGR-PART-NO	MFGR	WAVETEK NO.	QTY
R10 R12	RES,C,1/4W,5%,4.7K	CF1/4-4.7K	ASE	4700-15-4701	2.000
R11	RES,C,1/4W,5%,10K	CF1/4-10K	ASE	4700-15-1002	1.000
R13	RES,C,1/4W,5%,1.2K	CF1/4-1.2K	ASE	4700-15-1201	1.000

REFERENCE DESIGNATORS	PART DESCRIPTION	ORIG-MFGR-PART-NO	MFGR	WAVETEK NO.	QTY
1	TERM,FEMALE	02-09-1118	MOL	2113-09-0003	2.000
P01	CORD SET,18/3SVT,6FT BK,MLD,CAP,UL-APPRV	6011-80-0001	ECMC	6011-80-0001	1.000

WAVETEK PARTS LIST	LINE CORD ASSY,DPS10	1219-40-0013 PAGE: 1	B REV

REFERENCE DESIGNATORS	PART DESCRIPTION	ORIG-MFGR-PART-NO	MFGR	WAVETEK NO.	QTY
4	HANDLE TRIM,4-7/16 REF:3210-06-0029	2810-07-0005	W-I	2810-07-0005	2.000
5	SCW,SFH,4-40X3/8	2133NP	F-S	2810-19-4106	4.000
6	SCW,SOH,6-32X3/8	2332NP	F-S	2810-21-6106	4.000
6S105 S101 S102 S103 S104 S106 S107 S108 S109 S110 S111 S112 S113 S114 S115 S116 S117 S118 S119 S120	SOLOD STATE SWITCH	1001SD4A3S	MRO	5111-00-0005	20.000
10	SCW,SRH,4-40X1/4	2012NP	F-S	2810-18-4104	5.000
11	SCW,SRH,4-40X1/2	2016NP	F-S	2810-18-4108	2.000
13	BEZEL W/FILTER 4-IN.	140-4	RMF	2410-08-0001	1.000
14	LO,WASHER,INT,4 HW101-400	1331NP	F-S	2810-24-4000	7.000
CR103 CR104 CR105 CR106 CR107 CR108 CR109 CR110 CR111 CR112 CR113 CR114 CR115	LED,RED,RECTANGULAR V=5.0V,IF=35mA Int=4mcd,SS#2	MV57124	MNO	4810-02-0004	13.000
DS101 DS102 DS103 DS104	LED DISPLAY,7-SEG,.30	MAN74A	MNO	2410-03-0003	4.000
IC101 IC102	HEX D FLIP FLOP STATIC SENSITIVE	CD40174BE	RCA	8004-01-7412	2.000
IC103 IC104 IC105 IC106	BCD/7-SEG DCDR STATIC SENSITIVE	CD4511DE	RCA	8000-45-1112	4.000
IC108	PO VOLTAGE REG. STATIC SENSITIVE #2	UA7805UC	FCD	7000-78-0523	1.000

REFERENCE DESIGNATORS	PART DESCRIPTION	ORIG-MFGR-PART-NO	MFGR	WAVETEK NO.	QTY
C101	CAP,MON,50V,1UF	3420-050-E105M	AER	1510-11-3105	1.000
C102	CAP,ELEC,10V,150UF	157RSM025M	ICI	1510-20-8151	1.000
CR101 CR102	DIODE,SIGNAL,GP AXIAL,V=75V,IO=10mA CT=4pF,SS#2	1N914	G-E	4807-01-0914	2.000
IC107	HEX 3-ST INVERTER STATIC SENSITIVE	8T96	SIG	8000-08-9610	1.000
J101	PC EDGE CONN,50-CKT	011-25114-200	TEKA	2112-27-0002	1.000
Q101 Q102 Q103 Q104 Q105 Q106 Q107 Q108 Q109 Q110	NPN,TO-98,AMP F=60M,V=25,Icbo=100n P=400mW,hFE=7K,SS#2	2N5306	G-E	4901-05-3060	10.000
R101 R102 R103 R104 R105 R106 R107 R108 R109 R110 R111 R113	RES,C,1/4W,5%,56	CF1/4-56	ASE	4700-15-5609	12.000
R112	RES,C,1/4,5%,27	CF1/4-27	ASE	4700-15-2709	1.000
R115 R116 R117 R118 R119 R120 R121 R122 R123 R124 R125 R126 R127 R128 R129 R130 R131 R132 R133 R134 R135 R136 R137 R138 R139 R140 R141 R142 R146	RES,1/4W,5%,130	CF1/4-130	ASE	4700-15-1300	29.000
R143	RES NTWK,SIP,5-470K	605-474K	EPITK	4770-00-0010	1.000
R144	RES NTWK,SIP,9-470K	109-474J	EPITK	4770-00-0011	1.000
R145	RES NTWK,SIP,5-4.7K	605-472J	EPITK	4770-00-0003	1.000

REFERENCE DESIGNATORS	PART DESCRIPTION	ORIG-MFGR-PART-NO	MFGR	WAVETEK NO.	QTY
1	TERMINAL,MALE	02-09-2118	MOL	2113-09-0004	4.000
J101	RECEPTACLE,4 PIN	19-09-1042	MOL	2113-26-0002	1.000
P101	PLUG	19-09-2042	MOL	2113-26-0001	1.000
S121	SWITCH,TOGGLE DPDT	9201P3HZQ	C-K	5106-00-0016	1.000

WAVETEK PARTS LIST	PWR SWITCH,16-1/2	1212-00-0011 PAGE: 1	A REV

REFERENCE DESIGNATORS	PART DESCRIPTION	ORIG-MFGR-PART-NO	MFGR	WAVETEK NO.	QTY
J201 J301 J401	PC EDGE CONN,50-CKT	011-25114-200	TEKA	2112-27-0002	3.000
P101	DS PC BD,ZZ484 FROM:3210-05-0052	ZZ484	W-I	1710-00-2070	1.000

WAVETEK PARTS LIST	MAIN BD 1, 1855	1218-00-0530 PAGE: 1	B REV

REFERENCE DESIGNATORS	PART DESCRIPTION	ORIG-MFGR-PART-NO	MFGR	WAVETEK NO.	QTY
J402 J502	PC EDGE CONN,56-CKT	011-28-114-200	TEKA	2112-27-0003	2.000

WAVETEK PARTS LIST	MAIN BD 2, 1855	1218-00-0540 PAGE: 1	A REV

REFERENCE DESIGNATORS	PART DESCRIPTION	ORIG-MFGR-PART-NO	MFGR	WAVETEK NO.	QTY
J06	DUAL MINI-LATCH HSG, 8-PIN	65043-033	BER	2113-28-0002	1.000

WAVETEK PARTS LIST	HARNESS, 1855	1219-00-0160 PAGE: 1	D REV

SECTION 6

PARTS LIST

1865B

		PAGE
A/D DATA MEM CD	1110-00-0080	6-3
REG CTL CD	1110-00-0100	6-5
V/H TIMING CD	1110-00-0110	6 7
PS BOARD ½	1110-00-0210	6-9
PS BOARD 3	1110-00-0220	6-10
PS BOARD 4	1110-00-0230	6-12
PS BOARD 5	1110-00-0240	6-14
MOTHER BOARD	1110-00-0320	6-16
PRELIMINARY	1111-40-0007	6-17
DC BLOCK B904	1118-40-9016	6-18
CABLE ASSY, 5 ½ IN	1217-70-0060	6-19
CABLE ASSY, 3 ½ IN	1217-70-0061	6-20
CABLE ASSY, 4 ½ IN	1217-70-0065	6-21
UPROC CARD	1110-00-0130	6-22
PSK DEMODULATOR, M119-50	1114-00-0351	6-24
MODULE ASSY, M119-50	1216-40-0027	6-25
AMP BOARD, M119	1218-00-0430	6-26
OSC BOARD, M119	1218-00-0440	6-27
PHASE LOCK BD, M119	1218-00-0450	6-28
RF AMP/ATTEN, M117-1	1114-00-9002	6-30
MODULE ASSY, M117	1216-40-0023	6-31
ATTEN PC BOARD, M117	1218-00-0390	6-32
PROG PC BOARD, M117	1218-00-0400	6-33
AMP BOARD 1, M117	1218-00-0420	6-34
AMP BOARD 2, M117	1218-00-0421	6-35

		PAGE
DIFF BIAS DET, M118-1	1114-00-9003	6-36
MODULE ASSY, M118	1216-40-0025	6-37
PC ASSEMBLY, M118	1218-00-0500	6-38
DUMMY BASE, FOR M119	1118-00-0048	6-40
FRONT PANEL ASSY	1118-40-0043	6-41
SUN SHIELD ASSY	1216-00-0013	6-42
65 HOUSING SUB ASSY	1216-40-0018	6-43
65 COVER-HSG SUB ASSY	1216-40-0019	6-44
CHASSIS ASSY	1216-40-0030	6-45
CARD CG/MTHR BD ASSY	1216-40-0032	6-46
MODULE HARNESS	1219-00-0164	6-47
ATTENUATOR/KEYBOARD HRNSS	1216-00-0165	6-48
OPTION HARNESS	1216-00-0166	6-49
ATTEN ASSY	1219-00-0168	6-50
CRT ASSEMBLY	1219-00-0172	6-51
BATT INTFC,BC2-1865	1019-00-0194	6-52
BC-2 HEATER CORD SET	1219-40-0089	6-53

REFERENCE DESIGNATORS	PART DESCRIPTION	ORIG-MFGR-PART-NO	MFGR	WAVETEK NO.	QTY
1	PV JUMPER	65474-002	BER	2112-10-0002	6.000
2	DS PC BD ZZ502A	ZZ502A	W-I	1710-00-3030	1.000
C401 C402	CAP,DISC,100V,.01UF TAPE AND REEL	68U103M	MDC	1510-10-2103	2.000
C403 C404	CAP,TANT,25V,1UF	100DE105K25A2	ACI	1510-21-7010	2.000
C405 C406	CAP,DISC,100V,.15UF	CY20A154M	C-L	1510-11-1154	2.000
C407 C408 C409 C410 C411	CAP,TANT,25V,10UF	100DE106M20C2	ACI	1510-21-7100	5.000
C412	CAP,MON,50V,1UF	3420-050-E105M	AER	1510-11-3105	1.000
C413	CAP,MICA,500V,.001UF	DM15-102J	ARC	1510-50-0102	1.000
IC401	QUAD NOR GATE STATIC SENSITIVE	MC14001BCP	MOT	8001-40-0110	1.000
IC402 IC413 IC422	QUAD POS. NAND STATIC SENSITIVE	SN74LS01	T-I	8000-74-0110	3.000
IC403 IC404	QUAD D FLIP-FLOP STATIC SENSITIVE	SN74LS175N	T-I	8007-41-7510	2.000
IC405 IC407	DAC,8-BIT STATIC SENSITIVE	DAC-08EQ	AMD	8000-00-0800	2.000
IC406	VOLTAGE REF STATIC SENSITIVE #2	REF-01CJ	PMI	7000-00-0100	1.000
IC408	VOLTAGE COMPARATOR STATIC SENSITIVE	AM686CN	AMD	8000-06-8600	1.000
IC409	REGISTER, 8/12 BIT, 5-A,STATIC SENSITIVE	AM2502PC	AMD	8000-25-0200	1.000
IC410	HEX FLIP-FLOP STATIC SENSITIVE	MC74HC174N	MOT	8007-41-7412	1.000
IC411 IC412	QUAD POS NAND STATIC SENSITIVE	MC74HC00N	MOT	8000-74-0012	2.000
IC414 IC415	SYNC 4-BIT COUNTER STATIC SENSITIVE	MC74HC161N	MOT	8007-41-6110	2.000
IC416 IC417	RAM, STATIC SENS.	MWS5101DL-3	NAT	8000-18-2210	2.000
IC418 IC419	QUAD 2/1 MUX STATIC SENSITIVE	CD40257BE	RCA	8004-02-5710	2.000
IC420 IC421	BUS BUFFER, 4-BIT STATIC SENSITIVE	CDP1856CE	RCA	8000-18-5610	2.000
IC423	DUAL MMV STATIC SENSITIVE	MM74HC123N	NAT	8007-41-2311	1.000
IC424	DUAL D, FLIP-FLOP STATIC SENSITIVE	MC14013BCP	MOT	8001-40-1310	1.000
P401 P402 P404 P405	HDR,RA,3-PIN REF:2112-08-0000	65524-403	BER	2112-08-0018	4.000

REFERENCE DESIGNATORS	PART DESCRIPTION	ORIG-MFGR-PART-NO	MFGR	WAVETEK NO.	QTY
P403 P406	HEADER,R.ANGLE,2-PIN REF:2112-08-0000	65524-402	BER	2112-08-0009	2.000
R401 R418 R425	RES,C,1/4W,5%,2K	CF1/4-2K	ASE	4700-15-2001	3.000
R402	RES,C,1/4W,5%,24K	CF1/4-24K	ASE	4700-15-2402	1.000
R403 R413 R416	RES,MF,1/8W,1%,4.99K	RN55D-4.99K	MILSP	4701-03-4991	3.000
R404	RES,C,1/4W,5%,510K	CF1/4-510K	ASE	4700-15-5103	1.000
R405 R406	RES,C,1/4W,5%,1K	CF1/4-1K	ASE	4700-15-1001	2.000
R407 R408 R409 R410	RES,C,1/4W,5%,150	CF1/4-150	ASE	4700-15-1500	4.000
R411 R412 R414 R415	RES,MF,1/8W,1%,2.49K	RN55D-2.49K	MILSP	4701-03-2491	4.000
R417	RES NTWK,SIP,9-4.7K	109-472J	EPITK	4770-00-0014	1.000
R419 R420	RES NTWK,SIP,5-4.7K	605-472J	EPITK	4770-00-0003	2.000
R421 R422	RES NTWK,SIP,9-470K	109-474J	EPITK	4770-00-0011	2.000
R423	RES,C,1/4W,5%,470K	CF1/4-470K	ASE	4700-15-4703	1.000
R424 R428 R429 R430	RES,C,1/4W,5%,10K	CF1/4-10K	ASE	4700-15-1002	4.000
R426	TRM,CM,L,100K,10%,PC 15T,PN,CW,.250H,.19W .75L,SA	89PR100K	BEK	4610-00-2104	1.000
R427	RES,C,1/4W,5%,220K	CF1/4220K	ASE	4700-15-2203	1.000

REFERENCE DESIGNATORS	PART DESCRIPTION	ORIG-MFGR-PART-NO	MFGR	WAVETEK NO.	QTY
1	PC BUS BAR, 16-PIN	ECI6102-3-8.3	ELDRE	2112-28-0009	1.000
2	PC BUS BAR, 10-PIN	ECI6102-3-5.3	ELDRE	2112-28-0004	1.000
6	DS PC BD ZZ500	ZZ500	W-I	1710-00-3010	1.000
C201	CAP,TANT,25V,1UF	100DE105K25A2	ACI	1510-21-7010	1.000
C202	CAP,TANT,25V,10UF	100DE106M20C2	ACI	1510-21-7100	1.000
C203	CAP,DISC,1KV,250PF	10TS-T25	SPR	1510-10-1251	1.000
CR201	DIODE,SIGNAL,GP AXIAL,V=75V,IO=10mA CT=4pF,SS#2	1N914	G-E	4807-01-0914	1.000
IC201 IC202 IC203 IC204 IC205 IC206 IC207 IC208 IC209 IC210 IC211 IC212 IC223 IC224	QUAD D, REGISTER STATIC SENSITIVE	MC14076BAP	MOT	8001-40-7610	14.000
IC213	DUAL J-K FLIP-FLOP STATIC SENSITIVE	MC74HC109N	MOT	8007-41-0910	1.000
IC214	SYNC 4-BIT COUNTER STATIC SENSITIVE	MC74HC161N	MOT	8007-41-6110	1.000
IC215	HEX INVERTER STATIC SENSITIVE	4069UBEX	C-D	8001-40-6912	1.000
IC216 IC217	QUAD NAND STATIC SENSITIVE	MC14011BCP	MOT	8001-40-1112	2.000
IC218	N-BIT,1 OF 8 DECODER STATIC SENSITIVE	CDP1853CE	RCA	8000-18-5310	1.000
IC219	QUAD AND GATE STATIC SENSITIVE	MC14081BCP	MOT	8001-40-8110	1.000
IC220	QUAD POS NAND STATIC SENSITIVE	MC74HC00N	MOT	8000-74-0012	1.000
IC221	DUAL D, FLIP-FLOP STATIC SENSITIVE	MC14013BCP	MOT	8001-40-1310	1.000
IC222 IC225	SYNC 4-BIT UP/DN CTR STATIC SENSITIVE	SN74LS169N	T-I	8007-41-6910	2.000
IC226	HEX INVERTER, STATIC SENSITIVE	MC74HC04N	MOT	8000-74-0411	1.000
J201	PV JUMPER	65474-002	BER	2112-10-0002	1.000
P201	HDR,RA,3-PIN REF:2112-08-0000	65524-403	BER	2112-08-0018	1.000
R201 R202	RES NTWK,SIP,9-470K	109-474J	EPITK	4770-00-0011	2.000
R203 R204	RES,C,1/4W,5%,10K	CF1/4-10K	ASE	4700-15-1002	2.000
R205	RES,C,1/4W,5%,100K	CF1/4-100K	ASE	4700-15-1003	1.000
R206	RES,C,1/4W,5%,470K	CF1/4-470K	ASE	4700-15-4703	1.000

REFERENCE DESIGNATORS	PART DESCRIPTION	ORIG-MFGR-PART-NO	MFGR	WAVETEK NO.	QTY
SW201	SWITCH,SLIDE	1101M2AB	C-K	5105-00-0010	1.000

REFERENCE DESIGNATORS	PART DESCRIPTION	ORIG-MFGR-PART-NO	MFGR	WAVETEK NO.	QTY
2	IC SOCKET,20-PIN	C842002	T-I	2112-00-0020	3.000
5	DS PC BD ZZ499B	ZZ499B	W-I	1710-00-3000	1.000
C101	CAP,MICA,500V,100PF	CD15-FD101J03	C-D	1510-50-0101	1.000
C102	CAP,TANT,25V,10UF	100DE106M20C2	ACI	1510-21-7100	1.000
C105	CAP,DISC,1KV,15PF TAPE AND REEL	10TCC-Q15	SPR	1510-10-0150	1.000
C106 C107 C108 C109 C110 C111 C112 C113 C114 C115 C116 C117	CAP,DISC,100V,.15UF	CY20A154M	C-L	1510-11-1154	12.000
IC100	PROM,1865,STAT 2 REF:8007-44-7100 $E548 REV 0	8410-00-0005	W-I	8410-00-0005	1.000
IC101 IC103 IC104 IC107 IC123 IC124 IC126 IC127	SYNC 4-BIT COUNTER STATIC SENSITIVE	MC74HC161N	MOT	8007-41-6110	8.000
IC102	PROM,1865,STAT 2 REF:8000-28-4200 $32B9	8410-00-0006	W-I	8410-00-0006	1.000
IC105 IC106	QUAD D FLIP-FLOP STATIC SENSITIVE	MC74HC175N	MOT	8007-41-7511	2.000
IC108 IC109 IC111 IC112 IC116	BIN, 4-BIT, CTR. STATIC SENSITIVE	MC14161BCP	MOT	8001-41-6110	5.000
IC110	QUAD AND GATE STATIC SENSITIVE	MC14081BCP	MOT	8001-40-8110	1.000
IC113	HEX INVERTER STATIC SENSITIVE	SN74LS05N	T-I	8000-74-0510	1.000
IC114	QUAD POS NAND STATIC SENSITIVE	MC74HC00N	MOT	8000-74-0012	1.000
IC115	PROM,1865,STAT 2 REF:8000-28-4200 $47CB REV 0	8410-00-0007	W-I	8410-00-0007	1.000
IC117	DATA SEL/MPXR STATIC SENSITIVE	MM74HC151N	NAT	8007-41-5111	1.000
IC118	QUAD POS. NAND STATIC SENSITIVE	SN7400	T-I	8000-74-0001	1.000
IC119	QUAD NAND STATIC SENSITIVE	MC14011BCP	MOT	8001-40-1112	1.000
IC120 IC121 IC122 IC125	QUAD 2-INPUT MUX STATIC SENSITIVE	MC74HC157N	MOT	8007-41-5712	4.000
IC128 IC129	QUAD D FLIP-FLOP STATIC SENSITIVE	SN74LS175N	T-I	8007-41-7510	2.000
Q101 Q102 Q103 Q104 Q105 Q106 Q107 Q108 Q109	PNP,TO-92,GP AMP/SW F=300,V=40,Icex=50nA P=625mW,hFE=100,SS$2	2N3906	T-I	4901-03-9060	9.000

REFERENCE DESIGNATORS	PART DESCRIPTION	ORIG-MFGR-PART-NO	MFGR	WAVETEK NO.	QTY
R101 R103	RES,C,1/4W,5%,3.3K	CF1/4-3.3K	ASE	4700-15-3301	2.000
R102 R104	RES,C,1/4W,5%,1.2K	CF1/4-1.2K	ASE	4700-15-1201	2.000
R105 R107 R149	RES,C,1/4W,5%,1K	CF1/4-1K	ASE	4700-15-1001	3.000
R106 R108	RES,C,1/4W,5%,10K	CF1/4-10K	ASE	4700-15-1002	2.000
R109 R110 R111 R146	RES,C,1/4W,5%,2K	CF1/4-2K	ASE	4700-15-2001	4.000
R112 R117 R120 R124 R128 R132 R137 R139 R143	RES,C,1/4W,5%,100	CF1/4-100	ASE	4700-15-1000	9.000
R113 R115 R119 R125 R127 R133 R135 R140 R142	RES,C,1/4W,5%,270	CF1/4-270	ASE	4700-15-2700	9.000
R114 R116 R121 R126 R129 R134 R136 R141 R144	RES,C,1/4W,5%,68	CF1/4-68	ASE	4700-15-6809	9.000
R118 R122 R123 R130 R131 R138 R145 R147 R148	TRM,CM,L,1K,10%,PC 15T,PN,CW,.250H,.19W .75L,SA	89PR1K	BEK	4610-00-2102	9.000
X1	CRYSTAL, 7.16850 MHZ	X32W-7.16850	W-I	2310-00-0891	1.000

REFERENCE DESIGNATORS	PART DESCRIPTION	ORIG-MFGR-PART-NO	MFGR	WAVETEK NO.	QTY
C01 C03	CAP,DISC,100V,.01UF TAPE AND REEL	68U103M	MDC	1510-10-2103	2.000
C02 C04	CAP,MON,50V,1UF	3420-050-E105M	AER	1510-11-3105	2.000
C05	CAP,DISC,1KV,.001UF TAPE AND REEL	5GAD10	SPR	1510-10-1102	1.000
C06	CAP,TANT,25V.10UF	TIM106K025P0V	MAL	1510-21-6100	1.000
C07 C08 C09 C10 C11 C12 C13 C14	CAP,TANT,10V,220UF	T310D227-010AS	UNCAR	1510-22-5221	8.000
CR01 CR02 CR03	DIODE,SIGNAL,GP AXIAL,V=75V,IO=10mA CT=4pF,SS#2	1N914	G-E	4807-01-0914	3.000
F01	FUSE,SLO-BLO,1-AMP	301001	LIT	2410-05-1006	1.000
IC01	DUAL OP AMP,MOT STATIC SENSITIVE #2	MC1458CP1-MOT	MOT	7000-14-5801	1.000
IC02	SWITCHMODE REGULATOR STATIC SENSITIVE #2	MC3420P	MOT	7000-34-2000	1.000
IC03	SWITCH REG STATIC SENSITIVE #2	PIC 00	UNIT	7000-06-0000	1.000
L01	TORROID, 270-UH FROM:1810-00-0014	1810-06-2700	W-I	1810-06-2700	1.000
Q01	PNP,TO-92,GP AMP/SW F=250,V=40,Icex=50nA P=625mW,hFE=50,SS#2	2N3905	NAT	4901-03-9050	1.000
Q02	NPN,TO-92,GP AMP/SW F=300,V-40,Icex=50nA P=625mW,hFE=100,SS#2	2N3904	NAT	4901-03-9040	1.000
R01	RES,C,1/4W,5%,15K	CF1/4-15K	ASE	4700-15-1502	1.000
R02	TRM,CM,L,5K,10%,PC 1T,PN,CW,.375H,.200W .375L,SA	3386W-1-502	BOU	4610-02-0502	1.000
R03	RES,C,1/4W,5%,1K	CF1/4-1K	ASE	4700-15-1001	1.000
R04	RES,C,1/4W,5%,100	CF1/4-100	ASE	4700-15-1000	1.000
R05 R07 R08	RES,C,1/4W,5%,20K	CF1/4-20K	ASE	4700-15-2002	3.000
R06 R10 R14	RES,C,1/4W,5%,10	CF1/4-10	ASE	4700-15-1009	3.000
R09 R11 R12 R17	RES,C,1/4W,5%,10K	CF1/4-10K	ASE	4700-15-1002	4.000
R13	RES,C,1/4W,5%,5.1K	CF1/4-5.1K	ASE	4700-15-5101	1.000
R15	RES,C,1/4W,5%,6.8K	CF1/4-6.8K	ASE	4700-15-6801	1.000
R16	RES,MF,1/8W,1%,13.0K	RN55D-13.0K	MILSP	4701-03-1302	1.000
R18	RES,C,1/4W,5%,330	CF1/4-330	ASE	4700-15-3300	1.000
R19	RES,WW,3W,5%,0.3-OHM	43JR30	OHM	4702-55-3007	1.000

WAVETEK PARTS LIST	PS BOARD 1/2, 1865	1110-00-0210 PAGE: 1	C REV

REFERENCE DESIGNATORS	PART DESCRIPTION	ORIG-MFGR-PART-NO	MFGR	WAVETEK NO.	QTY
C01 C02 C04 C07 C08	CAP,MON,50V,1UF	3420-050-E105M	AER	1510-11-3105	5.000
C03	CAP,DISC,100V,.01UF TAPE AND REEL	68U103M	MDC	1510-10-2103	1.000
C05	CAP,DISC,1KV,.001UF TAPE AND REEL	5GAD10	SPR	1510-10-1102	1.000
C06	CAP,TANT,25V,10UF	TIM106K025P0V	MAL	1510-21-6100	1.000
C09 C10 C11 C12	CAP,TANT,35V,47UF	T322F476M035AS	UNCAR	1510-22-4470	4.000
C13 C14 C15 C16	CAP,TANT,10V,220UF	T310D227-010AS	UNCAR	1510-22-5221	4.000
CR01 CR02 CR03 CR04	DIODE,SIGNAL,GP AXIAL,V=75V,IO=10mA CT=4pF,SS#2	1N914	G-E	4807-01-0914	4.000
CR05 CR06	DIODE RECT H EFF PWR AXIAL,PIV=50V CJ=15pF,SS#2	IN5802	UNIT	4806-01-5802	2.000
F01	FUSE,SLO-BLO,1-AMP	301001	LIT	2410-05-1006	1.000
IC01 IC03	DUAL OP AMP,MOT STATIC SENSITIVE #2	MC1458CP1-MOT	MOT	7000-14-5801	2.000
IC02	SWITCHMODE REGULATOR STATIC SENSITIVE #2	MC3420P	MOT	7000-34-2000	1.000
IC04	HEX INVERTER STATIC SENSITIVE	4069UBEX	C-D	8001-40-6912	1.000
L01 L02	TORROID, 135-UH FROM:1810-00-0013	1810-06-1350	W-I	1810-06-1350	2.000
Q01	PNP,TO-92,GP AMP/SW F=250,V=40,Icex=50nA P=625mW,hFE=50,SS#2	2N3905	NAT	4901-03-9050	1.000
Q02	NPN,TO-92,GP AMP/SW F=300,V-40,Icex=50nA P=625mW,hFE=100,SS#2	2N3904	NAT	4901-03-9040	1.000
Q03	PNP,TO-39,GP AMP F=400M,V=60,Icbo=50n P=10,hFE=35,SS#2	2N4030	NAT	4901-04-0300	1.000
Q04	FET-N,TO-202,POWER V=40,Id=1.4,P=15WSS#2	VN46AF	SCX	4902-00-0460	1.000
R01 R15	RES,C,1/4W,5%,6.8K	CF1/4-6.8K	ASE	4700-15-6801	2.000
R02	TRM,CM,L,5K,10%,PC 1T,PN,CW,.375H,.200W .375L,SA	3386W-1-502	BOU	4610-02-0502	1.000
R03 R09 R11 R12 R17 R18 R21 R22 R23 R26	RES,C,1/4W,5%,10K	CF1/4-10K	ASE	4700-15-1002	10.000
R04	RES,C,1/4W,5%,100	CF1/4-100	ASE	4700-15-1000	1.000
R05 R27	RES,C,1/4W,5%,3.9K	CF1/43.9K	ASE	4700-15-3901	2.000

WAVETEK PARTS LIST	PS BOARD 3, 1865	1110-00-0220 PAGE: 1	D REV

REFERENCE DESIGNATORS	PART DESCRIPTION	ORIG-MFGR-PART-NO	MFGR	WAVETEK NO.	QTY
R06 R07 R10 R14 R19 R24	RES,C,1/4W,5%,10	CF1/4-10	ASE	4700-15-1009	6.000
R08	RES,C,1/4W,5%,68K	CF1/4-68K	ASE	4700-15-6802	1.000
R13 R29 R30	RES,C,1/4W,5%,5.1K	CF1/4-5.1K	ASE	4700-15-5101	3.000
R16	RES,MF,1/8W,1%,13.0K	RN55D-13.0K	MILSP	4701-03-1302	1.000
R20	RES,C,1/4W,5%,100K	CF1/4-100K	ASE	4700-15-1003	1.000
R25	RES,C,1/4W,5%,2K	CF1/4-2K	ASE	4700-15-2001	1.000
R28	TRM,CM,L,2K,10%,PC 1T,PN,CW,.375H,.200W ,375L,SA	3386W-1-202	BOU	4610-02-0202	1.000
R31	RES,C,1/4W,5%,1K	CF1/4-1K	ASE	4700-15-1001	1.000
R32 R33	RES,WW,3W,5%,0.3-OHM	43JR30	OHM	4702-55-3007	2.000
W01 W02 W03 W04	WIRE,BUSS,22GA.	8021	BEL	6010-92-2000	4.000
W05	WIRE,TFE,SLD,24GA,YL	MIL-W-16878D-E-24-YL	MILSP	6012-22-4444	1.000

REFERENCE DESIGNATORS	PART DESCRIPTION	ORIG-MFGR-PART-NO	MFGR	WAVETEK NO.	QTY
C01 C02 C04 C07 C08	CAP,MON,50V,1UF	3420-050-E105M	AER	1510-11-3105	5.000
C03	CAP,DISC,100V,.01UF TAPE AND REEL	68U103M	MDC	1510-10-2103	1.000
C05	CAP,DISC,1KV,.001UF TAPE AND REEL	5GAD10	SPR	1510-10-1102	1.000
C06	CAP,TANT,25V,10UF	TIM106K025P0V	MAL	1510-21-6100	1.000
C09 C10 C11 C12 C13 C14 C15 C16	CAP,TANT,20V,100UF	T322F107M020AS	UNCAR	1510-22-3101	8.000
CR01 CR02 CR03 CR04	DIODE,SIGNAL,GP AXIAL,V=75V,IO=10mA CT=4pF,SS#2	1N914	G-E	4807-01-0914	4.000
CR05 CR06	DIODE RECT H EFF PWR AXIAL,PIV=50V CJ=15pF,SS#2	IN5802	UNIT	4806-01-5802	2.000
F-01	FUSE, AGA,32V 2AMP	AGA-2	BUS	2410-05-0030	1.000
IC01 IC03	DUAL OP AMP,MOT STATIC SENSITIVE #2	MC1458CP1-MOT	MOT	7000-14-5801	2.000
IC02	SWITCHMODE REGULATOR STATIC SENSITIVE #2	MC3420P	MOT	7000-34-2000	1.000
IC04	HEX INVERTER STATIC SENSITIVE	4069UBEX	C-D	8001-40-6912	1.000
L01 L02	TORROID, 135-UH FROM:1810-00-0013	1810-06-1350	W-I	1810-06-1350	2.000
Q01	PNP,TO-92,GP AMP/SW F=250,V=40,Icex=50nA P=625mW,hFE=50,SS#2	2N3905	NAT	4901-03-9050	1.000
Q02	NPN,TO-92,GP AMP/SW F=300,V-40,Icex=50nA P=625mW,hFE=100,SS#2	2N3904	NAT	4901-03-9040	1.000
Q03	PNP,TO-39,GP AMP F=400M,V=60,Icbo=50n P=10,hFE=35,SS#2	2N4030	NAT	4901-04-0300	1.000
Q04	FET-N,TO-202,POWER V=40,Id=1.4,P=15WSS#2	VN46AF	SCX	4902-00-0460	1.000
R01 R15	RES,C,1/4W,5%,6.8K	CF1/4-6.8K	ASE	4700-15-6801	2.000
R02 R28	TRM,CM,L,5K,10%,PC 1T,PN,CW,.375H,.200W .375L,SA	3386W-1-502	BOU	4610-02-0502	2.000
R03 R09 R11 R12 R17 R18 R21 R22 R23 R26 R27	RES,C,1/4W,5%,10K	CF1/4-10K	ASE	4700-15-1002	11.000
R04	RES,C,1/4W,5%,100	CF1/4-100	ASE	4700-15-1000	1.000
R05	RES,C,1/4W,5%,3.9K	CF1/43.9K	ASE	4700-15-3901	1.000
R06 R07 R10 R14 R19 R24	RES,C,1/4W,5%,10	CF1/4-10	ASE	4700-15-1009	6.000

REFERENCE DESIGNATORS	PART DESCRIPTION	ORIG-MFGR-PART-NO	MFGR	WAVETEK NO.	QTY
R08	RES,C,1/4W,5%,68K	CF1/4-68K	ASE	4700-15-6802	1.000
R13 R29 R30	RES,C,1/4W,5%,5.1K	CF1/4-5.1K	ASE	4700-15-5101	3.000
R16	RES,MF,1/8W,1%,13.0K	RN55D-13.0K	MILSP	4701-03-1302	1.000
R20	RES,C,1/4W,5%,100K	CF1/4-100K	ASE	4700-15-1003	1.000
R25	RES,C,1/4W,5%,2K	CF1/4-2K	ASE	4700-15-2001	1.000
R31	RES,C,1/4W,5%,1K	CF1/4-1K	ASE	4700-15-1001	1.000
R32 R33	RES,WW,3W,5%,0.3-OHM	43JR30	OHM	4702-55-3007	2.000
W01 W02 W03 W04	WIRE,BUSS,22GA.	8021	BEL	6010-92-2000	4.000
W05	WIRE,TFE,SLD,24GA,YL	MIL-W-16878D-E-24-YL	MILSP	6012-22-4444	1.000

REFERENCE DESIGNATORS	PART DESCRIPTION	ORIG-MFGR-PART-NO	MFGR	WAVETEK NO.	QTY
C01 C04 C06 C14	CAP,MON,50V,1UF	3420-050-E105M	AER	1510-11-3105	4.000
C02	CAP,TANT,25V.10UF	TIM106K025P0V	MAL	1510-21-6100	1.000
C03	CAP,DISC,100V,.01UF TAPE AND REEL	68U103M	MDC	1510-10-2103	1.000
C05	CAP,DISC,1KV,.005UF	5GA-D50	SPR	1510-10-1502	1.000
C07 C08 C09 C10	CAP,TANT,16V,150UF	T353M157K016AS	UNCAR	1510-22-6151	4.000
C11 C12 C13	CAP,TANT,25V,68UF	T353L686K025AS	UNCAR	1510-22-7680	3.000
CR01 CR02 CR03 CR05 CR06 CR07 CR08 CR09	DIODE,SIGNAL,GP AXIAL,V=75V,IO=10mA CT=4pF,SS#2	1N914	G-E	4807-01-0914	8.000
CR04	DIODE RECT H EFF PWR AXIAL,PIV=50V CJ=15pF,SS#2	IN5802	UNIT	4806-01-5802	1.000
F01	FUSE,SLO-BLO,5-AMP	301-005	LIT	2410-05-1008	1.000
IC01 IC04	DUAL OP AMP,MOT STATIC SENSITIVE #2	MC1458CP1-MOT	MOT	7000-14-5801	2.000
IC02	SWITCHMODE REGULATOR STATIC SENSITIVE #2	MC3420P	MOT	7000-34-2000	1.000
IC03	SWITCHING REGULATOR STATIC SENSITIVE #2	PIC 610	UNIT	7000-06-1000	1.000
K01 K02	RELAY,SEALED,12VDC	HB1E-DC12V	ARW-M	4510-00-0007	2.000
L01	TORROID, 270-UH FROM:1810-00-0014	1810-06-2700	W-I	1810-06-2700	1.000
Q01	PNP,TO-92,GP AMP/SW F=250,V=40,Icex=50nA P=625mW,hFE=50,SS#2	2N3905	NAT	4901-03-9050	1.000
Q02	PNP,TO-39,GP AMP F=400M,V=60,Icbo=50n P=10,hFE=35,SS#2	2N4030	NAT	4901-04-0300	1.000
Q03 Q04 Q05	NPN,TO-92,GP AMP/SW F=300,V=40,Icex=50nA P=625mW,hFE=100,SS#2	2N3904	NAT	4901-03-9040	3.000
R01 R18	RES,C,1/4W,5%,15K	CF1/4-15K	ASE	4700-15-1502	2.000
R02	TRM,CM,L,5K,10%,PC 1T,PN,CW,.375H,.200W .375L,SA	3386W-1-502	BOU	4610-02-0502	1.000
R03	RES,C,1/4W,5%,9.1K	CF1/4-9.1K	ASE	4700-15-9101	1.000
R04	RES,C,1/4W,5%,100	CF1/4-100	ASE	4700-15-1000	1.000
R05 R07 R10 R32	RES,C,1/4W,5%,10	CF1/4-10	ASE	4700-15-1009	4.000
R06 R09	RES,C,1/4W,5%,6.8K	CF1/4-6.8K	ASE	4700-15-6801	2.000
R08	RES,MF,1/8W,1%,13.0K	RN55D-13.0K	MILSP	4701-03-1302	1.000

WAVETEK PARTS LIST	PS BOARD 5, 1865	1110-00-0240 PAGE: 1	E REV

REFERENCE DESIGNATORS	PART DESCRIPTION	ORIG-MFGR-PART-NO	MFGR	WAVETEK NO.	QTY
R11 R12 R16 R34 R38	RES,C,1/4W,5%,10K	CF1/4-10K	ASE	4700-15-1002	5.000
R13	RES,C,1/4W,5%,560	CF1/4-560	ASE	4700-15-5600	1.000
R14 R22 R41	RES,C,1/4W,5%,5.1K	CF1/4-5.1K	ASE	4700-15-5101	3.000
R15	RES,C,1/4W,5%,1K	CF1/4-1K	ASE	4700-15-1001	1.000
R17	RES,C,1/4W,5%,8.2K	CF1/4-8.2K	ASE	4700-15-8201	1.000
R19	RES,C,1/4W,5%,75K	CF1/4-75K	ASE	4700-15-7502	1.000
R20	RES,C,1/4W,5%,180K	CF1/4-180K	ASE	4700-15-1803	1.000
R21	RES,C,1/8W,5%,1M	CF1/8-1M	ASE	4700-05-1004	1.000
R23 R25 R29 R31	RES,C,1/4W,5%,100K	CF1/4-100K	ASE	4700-15-1003	4.000
R24	TRM,CM,L,20K,10%,PC 1T,PC,CW,.19H,.375H .375L,TA,BOURNS ONLY	3386R-1-203-BOURNS	BOU	4610-01-9203	1.000
R26 R33	RES,C,1/4W,5%,20K	CF1/4-20K	ASE	4700-15-2002	2.000
R27 R39	RES,C,1/4W,5%,200K	CF1/4-200K	ASE	4700-15-2003	2.000
R28	RES,C,1/4W,5%,51K	CF1/4-51K	ASE	4700-15-5102	1.000
R30	RES,C,1/4W,5%,1M	CF1/4-1M	ASE	4700-15-1004	1.000
R35	RES,WW,3W,5%,0.3-OHM	43JR30	OHM	4702-55-3007	1.000
R36 R37	RES,C,1/4W,5%,33	CF1/4-33	ASE	4700-15-3309	2.000
R40	RES,C,1/4W,5%,3.9K	CF1/43.9K	ASE	4700-15-3901	1.000
W01 W02 W03 W04 W05 W06 W07 W08	WIRE,BUSS,22GA.	8021	BEL	6010-92-2000	8.000

REFERENCE DESIGNATORS	PART DESCRIPTION	ORIG-MFGR-PART-NO	MFGR	WAVETEK NO.	QTY
1	DS PC BD ZZ498B	ZZ498B	W-I	1710-00-2090	1.000
9	FERR. BEAD,LC000-009	K5-001-00/3B	FRXC	1813-00-0007	80.000
12	SCW,SBH,4-40X3/16	4021NP-3/16	F-S	2810-17-4103	2.000
13	LO,WASHER,INT,4 HW101-400	1331NP	F-S	2810-24-4000	2.000
C01 C02 C03 C04 C05 C06 C07 C08 C09 C10 C11 C12 C13	CAP,MON,50V,1UF	3420-050-E105M	AER	1510-11-3105	13.000
J01 J11 J12 J19 J20 J21 J22 J23	PC EDGE CONN,24-CKT	031-12114-200	TEKA	2112-27-0005	8.000
J02 J03 J04 J05 J06 J07 J08	PC EDGE CONN,50-CKT	011-25114-200	TEKA	2112-27-0002	7.000
L01 L02 L03 L04 L05 L06 L07 L08 L09 L10 L11 L12 L13 L14 L15 L16	RF CHOKE,REF ONLY	CHOKE	W-I	1819-99-9999	16.000
P14	HDR,RA,18-PIN REF:2112-08-0005	65521-418	BER	2112-08-0015	1.000
P15 P17	HDR,,RA,14-PIN REF:2112-08-0000	65524-414	BER	2112-08-0016	2.000
P16	HEADER,R.ANGLE,8-PIN REF:2112-08-0000	65524-408	BER	2112-08-0006	1.000
P18	HEADER,R.ANGLE,2-PIN REF:2112-08-0000	65524-402	BER	2112-08-0009	1.000
P25	PLUG,RA,4-PIN	09-75-1041	MOL	2112-06-0006	1.000

WAVETEK PARTS LIST	MOTHER BOARD, 1865	1110-00-0320 PAGE: 1	A REV

REFERENCE DESIGNATORS	PART DESCRIPTION	ORIG-MFGR-PART-NO	MFGR	WAVETEK NO.	QTY
B904	DC BLOCK B904	B904	W-I	1118-40-9016	1.000
W01	CABLE ASSY 6IN	WXB904	W-I	1217-70-9014	1.000
W02	CABLE ASSY, 5 1/2 IN	1217-70-0060	W-I	1217-70-0060	1.000
W03	CABLE ASSY, 4 1/4 IN	WX1865-W3	W-I	1217-70-0065	1.000
W04 W05	CABLE ASSY, 3 1/2 IN	WX1865-W4	W-I	1217-70-0061	2.000

REFERENCE DESIGNATORS	PART DESCRIPTION	ORIG-MFGR-PART-NO	MFGR	WAVETEK NO.	QTY
1	INSRT,BNC,M,75 OHM PER B/P	1414-00-0019	W-I	1414-00-0019	1.000
2	COVER,DC BLOCK B904	1414-00-9042	W-I	1414-00-9042	1.000
3	CAN,.734X2.172X.73 STEEL,HOT TIN DIP	HU-5361-ST	HUD	3210-08-0022	1.000
4	DECAL, DC BLOCK B904	2414-01-1001	W-I	2414-01-1001	1.000
5	CABLE, COAX,RG302/U	RG302/U	TIMES	6011-40-0019	2.000
C1 C2	CAP,DISC,1KV,.003UF TAPE AND REEL	5GA-D30	SPR	1510-10-1302	2.000
L01	CHOKE,COATED,10UH 10%,D=0.120IN, L=0.300IN,I=130MA	08N100	JEF	1810-03-0100	1.000
P1	CONN JF000-004	27-21	APL	2110-03-0001	1.000
P2	CONN,BNC-M,75,CABLE	28P189-2	S-C	2110-01-0002	1.000

REFERENCE DESIGNATORS	PART DESCRIPTION	ORIG-MFGR-PART-NO	MFGR	WAVETEK NO.	QTY
1	CONN,BNC-M,75,CABLE	28P189-1	S-C	2110-01-0001	2.000

WAVETEK PARTS LIST	CABLE ASSY, 5 1/2 IN	1217-70-0060 PAGE: 1	REV

REFERENCE DESIGNATORS	PART DESCRIPTION	ORIG-MFGR-PART-NO	MFGR	WAVETEK NO.	QTY
1	CONN JF000-008	27-25	APL	2110-03-1004	2.000

WAVETEK PARTS LIST	CABLE ASSY, 3 1/2 IN	1217-70-0061 PAGE: 1	REV

REFERENCE DESIGNATORS	PART DESCRIPTION	ORIG-MFGR-PART-NO	MFGR	WAVETEK NO.	QTY
1	CONN JF000-008	27-25	APL	2110-03-1004	1.000
2	CONN,BNC-M,75,CABLE	28P189-1	S-C	2110-01-0001	1.000

WAVETEK PARTS LIST	CABLE ASSY, 4 1/4 IN	1217-70-0065 PAGE: 1	A REV

REFERENCE DESIGNATORS	PART DESCRIPTION	ORIG-MFGR-PART-NO	MFGR	WAVETEK NO.	QTY
1	PC BUS BAR,6-PIN	ECI6102-3-3.3	ELDRE	2112-28-0003	1.000
2	PC BUS BAR, 12-PIN	ECI6102-3-6.3	ELDRE	2112-28-0008	1.000
3	PGM DIP SHUNT	435704-8	AMP	2112-28-0001	2.000
5	IC SKT,16 PIN MC000-074	DILB-16P-108	BURND	2112-00-0012	2.000
8	IC SKT,PC,24 PIN MC000-126	C932402	T-I	2112-00-0013	2.000
9	DS PC BD ZZ501A	ZZ501A	W-I	1710-00-3020	1.000
C301 C302	CAP,TANT,25V,10UF	100DE106M20C2	ACI	1510-21-7100	2.000
IC301	DECODER/DEMUXER STATIC SENSITIVE	MC74HC138N	MOT	8007-41-3811	1.000
IC302 IC303	QUAD LATCH STATIC SENSITIVE	MC14042BCP	MOT	8001-40-4210	2.000
IC304 IC318	HEX INVERTER STATIC SENSITIVE	SN74LS05N	T-I	8000-74-0510	2.000
IC305	HEX BUS DRIVER STATIC SENSITIVE	SN74LS366A	T-I	8007-43-6610	1.000
IC306	UART, STATIC SENS.	CDP1854CE	RCA	8000-18-5410	1.000
IC307	ROM,MOD.,1865,LEFT STATIC SENSITIVE	8000-25-1610(L)	W-I	8410-00-0011	1.000
IC308	ROM,MOD.,1865,RIGHT STATIC SENSITIVE	8000-25-1610(R)	W-I	8410-00-0012	1.000
IC309	MICROPROCESSOR STATIC SENSITIVE	CDP1802CE	RCA	8000-18-0210	1.000
IC310	HEX INVERTER STATIC SENSITIVE	4069UBEX	C-D	8001-40-6912	1.000
IC311 IC312	PGM, 4-BIT, CTR. STATIC SENSITIVE	CD40161BE	RCA	8004-01-6110	2.000
IC313 IC314 IC316 IC317	RAM, STATIC SENS.	MWS5101DL-3	NAT	8000-18-2210	4.000
R301 R307 R308	RES NTWK,SIP,9-10K	109-103J	EPITK	4770-00-0012	3.000
R302 R311	RES,C,1/4W,5%,10K	CF1/4-10K	ASE	4700-15-1002	2.000
R303	RES,C,1/4W,5%,51K	CF1/4-51K	ASE	4700-15-5102	1.000
R304	RES,C,1/4W,5%,20K	CF1/4-20K	ASE	4700-15-2002	1.000
R305	RES,C,1/4W,5%,200K	CF1/4-200K	ASE	4700-15-2003	1.000
R306	RES NTWK,SIP,9-4.7K	109-472J	EPITK	4770-00-0014	1.000
R309 R310 R316	RES,C,1/4W,5%,470K	CF1/4-470K	ASE	4700-15-4703	3.000
R312	RES NTWK,SIP,5-470K	605-474K	EPITK	4770-00-0010	1.000
S302	SWITCH,SLIDE	1101M2AB	C-K	5105-00-0010	1.000

REFERENCE DESIGNATORS	PART DESCRIPTION	ORIG-MFGR-PART-NO	MFGR	WAVETEK NO.	QTY
TP1/2	HEADER,R.ANGLE,2-PIN REF:2112-08-0000	65524-402	BER	2112-08-0009	1.000

REFERENCE DESIGNATORS	PART DESCRIPTION	ORIG-MFGR-PART-NO	MFGR	WAVETEK NO.	QTY
10	COVER PER B/P	A001-910	W-I	1410-00-2380	1.000
11	COVER PER B/P	A001-911	W-I	1410-00-2390	1.000
16	SCW,SBH,2-56X3/16	4001NP	F-S	2810-17-2103	15.000
17	LOWASHER,INT 2	1330NP	F-S	2810-24-2000	15.000
23	FISHPAPER;PHASE LOCK PER B/P	A001-963	W-I	1410-00-9440	1.000
24	FISHPAPER; BANDPASS PER B/P	A001-964	W-I	1410-00-9450	1.000
25	OSC FISH PAPER B/P	A001-965	W-I	1410-00-9460	1.000
C13	CAP,TANT,25V,10UF	100DE106M20C2	ACI	1510-21-7100	1.000
CR01 CR02	DIODE,RECT,GP DO-15,V=400V,IO=1.0A SUR I=30A,SS#2	1N4004	P-C	4806-01-4004	2.000
L01	TOROID,10T,1-1/4L	LA009-010-1	W-I	1810-05-0004	1.000
L02 L03	TOROID,10T,1-1/2L	LA009-010-2	W-I	1810-05-0005	2.000
L04	CHOKE,COATED,47UH 10%,D=0.120IN L=0.300,I=110MA	08N470	JEF	1810-03-0470	1.000
MX01	MIXER,DBL.BALANCED	CM-1	VARIL	3010-54-0001	1.000
R01	RES,C,1/4W,5%,10K	CF1/4-10K	ASE	4700-15-1002	1.000
ZA01	AMP BOARD, M119	M119-50-AMP BD	W-I	1218-00-0430	1.000
ZA02	OSC BOARD, M119	M119-50-OSC BD	W-I	1218-00-0440	1.000
ZA03	PHASE LOCK BD, M119	M119-PH LK BD	W-I	1218-00-0450	1.000

REFERENCE DESIGNATORS	PART DESCRIPTION	ORIG-MFGR-PART-NO	MFGR	WAVETEK NO.	QTY
1	FRAME,M119-50 FROM:1410-00-4700	1414-30-1035	W-I	1414-30-1035	1.000
2	INT,LOWASHER,6 HW101-600	1304ZP	F-S	2810-24-6000	1.000
3	CONN JF000-004	27-21	APL	2110-03-0001	1.000
4	BASE,M119 FROM:3210-08-0033	1414-30-1018	W-I	1414-30-1018	1.000
5	INDEX STUD	A001-009	W-I	1410-00-2680	1.000
8	SCW,SBH,6-32X3/16	6-32X3/16,BH,NP	S-S	2810-17-6103	1.000
9	FSK DEMOD CHASSIS CTR PLATE B/P	1410-30-1690	W-I	1410-30-1690	1.000
12	SHIELD PER B/P	A001-912	W-I	1410-00-2430	1.000
13	SHIELD PER B/P	A001-913	W-I	1410-00-2440	1.000
14	SHIELD PER B/P	A01-915	W-I	1410-00-2480	1.000
26	CAP,FT,500V,6.8PF	54-794-010-X5E0-689M	SPEC	1510-30-1689	3.000
27	CAP,FT,500V,1000PF	54-794-010-102P	SPEC	1510-30-8102	3.000
C01 C02 C03	CAP,FT,500V,2200PF	4420-2200PF	AER	1510-31-1222	3.000
C04 C05	CAP,FT,500V,4.7PF	4420-4.7PF	AER	1510-31-4479	2.000

REFERENCE DESIGNATORS	PART DESCRIPTION	ORIG-MFGR-PART-NO	MFGR	WAVETEK NO.	QTY
C101 C110 C113	CAP,DISC,1KV,470PF TAPE AND REEL	60U471M	MDC	1510-10-1471	3.000
C102 C111	CAP,DISC,1KV,.001UF TAPE AND REEL	5GAD10	SPR	1510-10-1102	2.000
C103	CAP,DISC,100V,.01UF TAPE AND REEL	68U103M	MDC	1510-10-2103	1.000
C104 C112	CAP,MON,50V,1UF	3420-050-E105M	AER	1510-11-3105	2.000
C105	CAP,MICA,300V,10PF	DM-5CC100J	ARC	1510-50-1100	1.000
C106 C108	CAP,COMP,500V,.47PF TAPE AND REEL	MC-.47PF	Q-C	1510-40-1478	2.000
C107	CAP,VAR,3.5-13PF	7S-TRIKO-02-3.5-13PF	STR	1510-70-0130	1.000
C109 C114	CAP,VARI,7-35PF,250V CV101-035	7STRIKO-02	STR	1510-70-0350	2.000
L101 L107	TOROID,10T,1-1/4L	LA009-010-1	W-I	1810-05-0004	2.000
L102	CHOKE,COATED,0.22UH 10%,D=0.120IN L=0.300,I=1025MA	09CR22K	JEF	1810-03-0228	1.000
L103	COL,AIR,5 1/2T.200ID	6T,PER SPEC.	ATR	1815-00-0004	1.000
L104	CHOKE,COATED,0.82UH 10%,D=0.120IN L=0.300IN,I=415MA	08NR82	JEF	1810-03-0828	1.000
L105	COIL,12 T,2ID, PER B/P	1815-00-0031	W-I	1815-00-0031	1.000
L106	CHOKE,COATED,0.10UH 10%,D=0.120 IN, L=0.300IN,I=1350MA	08NR10	JEF	1810-03-0019	1.000
Q101 Q102	NPN,TO-72,UHF AMP VCBO=15V,IC=25mA P=200mW,hFE=25,SS#2	2N5053	APX	4901-05-0530	2.000
R101	RES,C,1/8W,5%,6.8K	CF1/8-6.8K	ASE	4700-05-6801	1.000
R102 R106	RES,C,1/8W,5%,20K	CF1/8-20K	ASE	4700-05-2002	2.000
R103 R107	RES,C,1/8W,5%,10	CF1/8-10	ASE	4700-05-1009	2.000
R104 R108	RES,C,1/4W,5%,1K	CF1/4-1K	ASE	4700-15-1001	2.000
R105	RES,C,1/8W,5%,4.7K	CF1/8-4.7K	ASE	4700-05-4701	1.000

REFERENCE DESIGNATORS	PART DESCRIPTION	ORIG-MFGR-PART-NO	MFGR	WAVETEK NO.	QTY
C201	CAP,MON,50V,1UF	3420-050-E105M	AER	1510-11-3105	1.000
C202 C203 C205	CAP,DISC,1KV,.001UF TAPE AND REEL	5GAD10	SPR	1510-10-1102	3.000
C204	CAP,DISC,100V,.15UF	CY20A154M	C-L	1510-11-1154	1.000
C206	CAP,MICA,300V,15PF	DM-5CC150J	ARC	1510-50-1150	1.000
C207	CAP,MICA,300V,47PF	ADM-5-470J	ARC	1510-50-1470	1.000
C208	CAP,MICA,300V,5PF	DM-5CC050D	ARC	1510-50-1509	1.000
C209	CAP,VAR,3.5-13PF	7S-TRIKD-02-3.5-13PF	STR	1510-70-0130	1.000
C210	CAP,TANT,25V,1UF	100DE105K25A2	ACI	1510-21-7010	1.000
CR201	DIODE,VAR CAP,UHF AXIAL,V=28,IO=20mA SS#2	BB205B	APX	4803-02-0004	1.000
L201 L202	TOROID,10T,1-1/4L	LA009-010-1	W-I	1810-05-0004	2.000
L203	CHOKE,COATED,0.47UH 10%,D=0.120IN L=0.300IN,I=650MA	08NR47	JEF	1810-03-0478	1.000
L204	COIL,AIR,3T,.200 ID	3T,PER SPEC.	ATR	1815-00-0002	1.000
Q201	NPN,TO-72,UHF AMP VCBO=15V,IC=25mA P=200mW,hFE=25,SS#2	2N5053	APX	4901-05-0530	1.000
R201	RES,C,1/8W,5%,9.1K	CF1/8-9.1K	ASE	4700-05-9101	1.000
R202	RES,C, 1/8W,5%, 5.1K	CF 1/8 -5.1 K	ASE	4700-05-5101	1.000
R203	RES.1/8W,5,330	CF1/8-330	ASE	4700-05-3300	1.000
R204	RES,C,1/8W,5%,47	CF1/8-47	ASE	4700-05-4709	1.000
R205	RES,C,1/8W,5%,20K	CF1/8-20K	ASE	4700-05-2002	1.000
R206 R208	RES.C.1/8W 5% 470	CF1/8-470	ASE	4700-05-4700	2.000
R207	RES,C,1/8W,5%,27	CF1/8-27	ASE	4700-05-2709	1.000
R209	RES,C,1/8W,5%,1.8K	CF1/8-1.8K	ASE	4700-05-1801	1.000

REFERENCE DESIGNATORS	PART DESCRIPTION	ORIG-MFGR-PART-NO	MFGR	WAVETEK NO.	QTY
C301 C302	CAP,MICA,100V,250PF	ADM-10CA251J	ARC	1510-50-5251	2.000
C303	CAP,DISC,1KV,.001UF TAPE AND REEL	5GAD10	SPR	1510-10-1102	1.000
C304 C305 C307 C312 C313 C315 C316 C318	CAP,MON,50V,1UF	3420-050-E105M	AER	1510-11-3105	8.000
C306 C308 C309 C310 C317	CAP,DISC,100V,.15UF	CY20A154M	C-L	1510-11-1154	5.000
C311	CAP,DISC,100V,.01UF TAPE AND REEL	68U103M	MDC	1510-10-2103	1.000
C314	CAP,DISC,1KV,270PF	60U271M	MDC	1510-10-1271	1.000
C319 C320	CAP,MICA,500V,.001UF	DM15-102J	ARC	1510-50-0102	2.000
C321	CAP,TANT,25V,10UF	100DE106M20C2	ACI	1510-21-7100	1.000
CR301 CR302 CR303	DIODE,SIGNAL,GP AXIAL,V=75V,IO=10mA CT=4pF,SS#2	1N914	G-E	4807-01-0914	3.000
IC301	IF AMP STATIC SENSITIVE #2	MC1350P	MOT	7000-13-5000	1.000
IC302	PHASE DETECTOR STATIC SENSITIVE	MC4044P	MOT	8000-40-4400	1.000
IC303	DUAL OP AMP STATIC SENSITIVE #2	TL082CP	T-I	7000-00-8200	1.000
IC304	QUAD NAND STATIC SENSITIVE	MC14011BCP	MOT	8001-40-1112	1.000
L301 L303	CHOKE,COATED,6.8UH 10%,D=0.120IN L=0.300IN,I=175MA	08N6R8	JEF	1810-03-0689	2.000
L302	CHOKE,COATED,3.9UH 10%,D=0.120IN L=0.300IN,I=250MA	08N3R9	JEF	1810-03-0399	1.000
L304 L305	TOROID,10T,1-1/4L	LA009-010-1	W-I	1810-05-0004	2.000
Q301	NPN,TO-72,UHF AMP VCBO=15V,IC=25mA P=200mW,hFE=25,SS#2	2N5053	APX	4901-05-0530	1.000
Q302	PNP,TO-92,GP AMP/SW F=300,V=40,Icex=50nA P=625mW,hFE=100,SS#2	2N3906	T-I	4901-03-9060	1.000
R301	RES,C,1/4W,5%,2.7K	CF1/4-2.7K	ASE	4700-15-2701	1.000
R302 R309 R323 R324 R329 R331	RES,C,1/4W,5%,20K	CF1/4-20K	ASE	4700-15-2002	6.000
R303 R315 R332	RES,C,1/4W,5%,1K	CF1/4-1K	ASE	4700-15-1001	3.000
R304 R311 R319 R325	RES,C,1/4W,5%,10	CF1/4-10	ASE	4700-15-1009	4.000
R305	RES,C,1/4W,5%,5.6K	CF1/4-5.6K	ASE	4700-15-5601	1.000

REFERENCE DESIGNATORS	PART DESCRIPTION	ORIG-MFGR-PART-NO	MFGR	WAVETEK NO.	QTY
R306	RES,C,1/4W,5%,100	CF1/4-100	ASE	4700-15-1000	1.000
R307	RES,C,1/4W,5%,200	CF1/4-200	ASE	4700-15-2000	1.000
R308	RES,C,1/4W,5%,470	CF1/4-470	ASE	4700-15-4700	1.000
R310	RES,C,1/4W,5%,180	CF1/4-180	ASE	4700-15-1800	1.000
R312 R314	RES,MF,1/8W,1%,1K	RN55D-1K	MILSP	4701-03-1001	2.000
R313	RES,C,1/4W,5%,2.7	CF1/4-2.7	ASE	4700-15-2708	1.000
R316	RES,C,1/4W,5%,2K	CF1/4-2K	ASE	4700-15-2001	1.000
R317	TRM,CM,L,2K,20%,PC 1T,PN,CW,.375H,.15W .350L,SA	91AR2K	BEK	4610-00-7202	1.000
R318	RES,C,1/4W,5%,27K	CF1/4-27K	ASE	4700-15-2702	1.000
R321	RES,MF,1/8W,1%,4.99K	RN55D-4.99K	MILSP	4701-03-4991	1.000
R322	RES,C,1/4W,5%,100K	CF1/4-100K	ASE	4700-15-1003	1.000
R326	RES,MF,1/8W,1%,11.3K	RN55D-11.3K	MILSP	4701-03-1132	1.000
R327	RES,MF,1/8W,1%,1.50K	RN55D-1.50K	MILSP	4701-03-1501	1.000
R328 R330	RES,C,1/8W,5%,100K	CF1/8-100K	ASE	4700-05-1003	2.000

REFERENCE DESIGNATORS	PART DESCRIPTION	ORIG-MFGR-PART-NO	MFGR	WAVETEK NO.	QTY
8	AMP BOARD 1, M117	M117-AMP BD 1	W-I	1218-00-0420	1.000
10	SHIELD,RF PER B/P	A001-922	W-I	1410-00-9050	1.000
11	ATTEN PC BOARD, M117	M117-ATT BD	W-I	1218-00-0390	1.000
12	SHIELD PER B/P	A001-923	W-I	1410-00-9060	1.000
13	PROG PC BOARD, M117	M117-PROG BD	W-I	1218-00-0400	1.000
14	SCW,SBH,2-56X1/8	4000NP	F-S	2810-17-2102	16.000
17	FISH PAPER PER B/P	A001-961	W-I	1410-00-9310	1.000
18	AMP BOARD 2, M117	M117-AMP BD 2	W-I	1218-00-0421	1.000
19	COVER PER B/P	A001-924	W-I	1410-00-9070	2.000
20	COVER PR B/P	A001-926	W-I	1410-00-9090	1.000
21	SCW,SBH,2-56X3/16	4001NP	F-S	2810-17-2103	4.000
C08 C09 C10 C11 C12 C13 C14	CAP,FT,500V,2200PF	4420-2200PF	AER	1510-31-1222	7.000
C15	CAP,COMP,500V,1PF	QC-1PF	Q-C	1510-40-0010	1.000
R313 R315	RES,C,1/4W,5%,2.7	CF1/4-2.7	ASE	4700-15-2708	2.000

REFERENCE DESIGNATORS	PART DESCRIPTION	ORIG-MFGR-PART-NO	MFGR	WAVETEK NO.	QTY
1	CHASSIS,M117 FROM:1410-00-3360	1414-30-1009	W-I	1414-30-1009	1.000
2	BASE,M117 FROM:3210-08-0033	1414-30-1008	W-I	1414-30-1008	1.000
3	INDEX STUD	A001-009	W-I	1410-00-2680	1.000
4	NUT,6-32X1/4HN101-600	8005NP	F-S	2810-14-6100	2.000
5	INT,LOWASHER,6 HW101-600	1304ZP	F-S	2810-24-6000	2.000
6	SCW,SBH,6-32X1/4	6-32X1/4,UC,BH,NP	S-S	2810-17-6104	1.000
7	SHIELD PER B/P	A001-920	W-I	1410-00-9080	2.000
9	SHIELD PER B/P	A001-921	W-I	1410-00-9040	1.000
21	CONN JF000-004	27-21	APL	2110-03-0001	2.000
22	CLOVERLEAF FTE-12 HT101-000	011-6808-000-59-9	SEL	2112-18-0001	2.000
23	CAP,FT,500V,470PF	54-794-010-X5R0-471M	SPEC	1510-30-0471	7.000

WAVETEK PARTS LIST	MODULE ASSY,M117	1216-40-0023 PAGE: 1	A REV

REFERENCE DESIGNATORS	PART DESCRIPTION	ORIG-MFGR-PART-NO	MFGR	WAVETEK NO.	QTY
C301 C302 C303 C304	CAP,CHIP,.1 MF TAPE AND REEL	GRH-42-2X7R104M50V	MURGA	1510-05-0104	4.000
CR301 CR302 CR303 CR304 CR305 CR306	DIODE,SWITCHING,VHF DO-34,V=35,IF=100mA CT=0.8pF,SS#2	BA482	APX	4812-02-0004	6.000
R301 R302 R304 R305	RES,C,1/8W,5%,1K RC101-210	CF1/8-1K	ASE	4700-05-1001	4.000
R303	RES,C,1/4W,5%,2K	CF1/4-2K	ASE	4700-15-2001	1.000
R306 R307	RES,L-A,1/4W,1%,143 TAPE AND REEL	SPS-N-347-143	IRC	4741-14-3008	2.000
R308	RES,L-A,1/4W,1%,107 TAPE AND REEL	SPS-N-347-107	IRC	4741-10-7008	1.000
R309 R310	RES,L-A,1/4W,1%,90.9 TAPE AND REEL	SPS-N-347-90.9	IRC	4741-90-9007	2.000
R311	RES,L-A,1/4W,1%,374 TAPE AND REEL	SPS-N-347-374	IRC	4741-37-4008	1.000
R312 R314	RES,C,1/8W,5%,2K	CF1/8-2K	ASE	4700-05-2001	2.000

REFERENCE DESIGNATORS	PART DESCRIPTION	ORIG-MFGR-PART-NO	MFGR	WAVETEK NO.	QTY
C401 C402 C404 C405 C408 C409	CAP,TANT,25V,1UF	100DE105K25A2	ACI	1510-21-7010	6.000
C403 C406 C407	CAP,DISC,100V,.15UF	CY20A154M	C-L	1510-11-1154	3.000
IC401 IC402 IC403	OP AMP STATIC SENSITIVE #2	N5741CV	SIG	7000-57-4100	3.000
R401 R407 R418	RES,C,1/4W,5%,27K	CF1/4-27K	ASE	4700-15-2702	3.000
R402 R408 R417	RES,C,1/4W,5%,6.8K	CF1/4-6.8K	ASE	4700-15-6801	3.000
R403 R409 R416	RES,C,1/4W,5%,30K	CF1/4-30K	ASE	4700-15-3002	3.000
R404 R406 R410 R412 R413 R415	RES,C,1/4W,5%,10	CF1/4-10	ASE	4700-15-1009	6.000
R405 R411 R414 R419 R420 R422 R423	RES,C,1/4W,5%,1K	CF1/4-1K	ASE	4700-15-1001	7.000
R421	RES,C,1/4W,5%,100	CF1/4-100	ASE	4700-15-1000	1.000
W401 W402 W403	WIRE,BUSS,22GA.	8021	BEL	6010-92-2000	3.000

REFERENCE DESIGNATORS	PART DESCRIPTION	ORIG-MFGR-PART-NO	MFGR	WAVETEK NO.	QTY
C101 C102 C103 C104 C105 C106 C107 C108 C109	CAP,CHIP,.1 MF TAPE AND REEL	GRH-42-2X7R104M50V	MURGA	1510-05-0104	9.000
C110	CAP,DISC,1KV,10PF TAPE AND REEL	10TCC-Q10	SPR	1510-10-0100	1.000
C111	CAP,VAR,3.5-13PF	7S-TRIKO-02-3.5-13PF	STR	1510-70-0130	1.000
L101 L102 L103 L104	TOROID,10T,1-1/4L	LA009-010-1	W-I	1810-05-0004	4.000
Q101 Q102 Q103 Q104	NPN,317A-01,AMP F=5G,V=15,Iceo=50mA P=180mW,hFE=25,SS#2	BFR90	APX	4902-00-0900	4.000
R101 R106 R107 R108	RES,C,1/8W,5%,240	BB-2415	*****	4705-05-2400	4.000
R102 R103 R104 R105	RES,C,1/8W,5%, 20K	BB2035	A-B	4705-05-2002	4.000
R109 R110	RES,C,1/4W,5%,1.5K	CF1/4-1.5K	ASE	4700-15-1501	2.000
R111 R112	RES,C,1/4W,5%,1K	CF1/4-1K	ASE	4700-15-1001	2.000
R113 R114 R115 R116 R117 R118 R120 R121	RES,C,1/8W,5%,39-OHM	BB3905	A-B	4705-05-3909	8.000
R119	RES,C,1/8W,5%,120	BB1215	A-B	4705-05-1200	1.000
R122	RES,C,1/8W,5%,22	BB2205	A-B	4705-05-2209	1.000

WAVETEK PARTS LIST	AMP BOARD 1, M117	1218-00-0420 PAGE: 1	B REV

REFERENCE DESIGNATORS	PART DESCRIPTION	ORIG-MFGR-PART-NO	MFGR	WAVETEK NO.	QTY
C201 C202 C203 C204 C206 C207 C208 C209	CAP,CHIP,.1 MF TAPE AND REEL	GRM-42-2X7R104M50V	MURGA	1510-05-0104	8.000
C205	CAP,CHIP,1000PF,50V TAPE AND REEL	5BN050S102KS	VAR	1510-00-1102	1.000
C210	CAP,DISC,1KV,10PF TAPE AND REEL	10TCC-Q10	SPR	1510-10-0100	1.000
C211	CAP,VAR,3.5-13PF	7S-TRIKO-02-3.5-13PF	STR	1510-70-0130	1.000
L201	TOROID,10T,1-1/2L	LA009-010-2	W-I	1810-05-0005	1.000
L202 L203 L204	TOROID,10T,1-1/4L	LA009-010-1	W-I	1810-05-0004	3.000
Q201 Q202 Q203 Q204	NPN,317A-01,AMP F=5G,V=15,Iceo=50nA P=180mW,hFE=25,55#2	BFR90	APX	4902-00-0900	4.000
R201 R206 R207 R208	RES,C,1/8W,5%,240	BB-2415	*****	4705-05-2400	4.000
R202 R203 R204 R205	RES,C,1/8W,5%, 20K	BB2035	A-B	4705-05-2002	4.000
R209 R210	RES,C,1/4W,5%,1.5K	CF1/4-1.5K	ASE	4700-15-1501	2.000
R211 R212	RES,C,1/4W,5%,1K	CF1/4-1K	ASE	4700-15-1001	2.000
R213 R214 R215 R216 R217 R218 R220 R221	RES,C,1/8W,5%,39-OHM	BB3905	A-B	4705-05-3909	8.000
R219	RES,C,1/8W,5%,120	BB1215	A-B	4705-05-1200	1.000
R222	RES,1/8W,5%,10-OHM	BB1005	A-B	4705-05-1009	1.000

REFERENCE DESIGNATORS	PART DESCRIPTION ><	ORIG-MFGR-PART-NO	MFGR	WAVETEK NO.	QTY
3	PC ASSEMBLY, M118	M118-PC	W-I	1218-00-0500	1.000

WAVETEK PARTS LIST	DIFF BIAS DET,M118-1	1114-00-9003 PAGE: 1	B REV

REFERENCE DESIGNATORS	PART DESCRIPTION	ORIG-MFGR-PART-NO	MFGR	WAVETEK NO.	QTY
1	FRAME,M118 FROM:1410-30-0700	1414-30-1012	W-I	1414-30-1012	1.000
2	BASE,M118 FROM:3210-08-0033	1414-30-1011	W-I	1414-30-1011	1.000
4	INDEX STUD	A001-009	W-I	1410-00-2680	1.000
5	SCW,SBH,6-32X3/16	6-32X3/16,BH,NP	S-S	2810-17-6103	1.000
6	INT,LOWASHER,6 HW101-600	1304ZP	F-S	2810-24-6000	2.000
7	CONN JF000-004	27-21	APL	2110-03-0001	2.000
8	SWITCH,SPDTST000-003	MST-105D	ALC	5106-00-0002	1.000
11	CAP,FT,500V,470PF	54-794-010-X5R0-471M	SPEC	1510-30-0471	3.000
12	CAP,FT,500V,6.8PF	54-794-010-X5E0-689M	SPEC	1510-30-1689	3.000

WAVETEK PARTS LIST	MODULE ASSY,M118	1216-40-0025 PAGE: 1	REV

REFERENCE DESIGNATORS	PART DESCRIPTION	ORIG-MFGR-PART-NO	MFGR	WAVETEK NO.	QTY
C01	CAP,VAR,2.5-5PF	5S-TRIKO-04-2.5/5	STR	1510-70-8509	1.000
C02 C03	CAP,DISC,1KV,470PF TAPE AND REEL	60U471M	MDC	1510-10-1471	2.000
C04 C05 C06 C07 C36	CAP,DISC,1KV,68PF	68U2J680J	MDC	1510-10-3680	5.000
C08 C09 C10 C13 C22 C23 C24 C25 C26 C27 C28 C29 C37 C38	CAP,MON,50V,1UF	3420-050-E105M	AER	1510-11-3105	14.000
C11 C39	CAP,DISC,1KV,.001UF TAPE AND REEL	5GAD10	SPR	1510-10-1102	2.000
C12	CAP,FILM,250V,.047UF	SMMKO.047/5%/100V	SECR	1510-60-9473	1.000
C14 C15 C16 C17 C18 C19 C20 C21	CAP,MICA,500V,.001UF	DM15-102J	ARC	1510-50-0102	8.000
CR01 CR02 CR03 CR04	DIODE,SCHOTTKY,LOW OFFSET AXIAL,V=5V CT=1.0pF,SS#1	5082-2835	H-P	4809-02-0002	4.000
IC01 IC02 IC03 IC04	DUAL OP AMP,RAY ONLY STATIC SENSITIVE #2	RC4558NB-RAY	RAY	7000-45-5801	4.000
IC05	QUAD ANALOG SWITCH STATIC SENSITIVE	HI-201-5	HSD	8000-02-0100	1.000
L01	RF CHOKE,REF ONLY	CHOKE	W-I	1819-99-9999	1.000
L02	TOROID,10T,1-1/4L	LA009-010-1	W-I	1810-05-0004	1.000
L03	TOROID,10T,1-1/2L	LA009-010-2	W-I	1810-05-0005	1.000
Q01 Q02	NPN,TO-92,GP AMP/SW F=300,V-40,Icex=50nA P=625mW,hFE=100,SS#2	2N3904	NAT	4901-03-9040	2.000
Q03	JFET-N,TO-92,GP AMP AUDIO,V=25,Igss=-1nA P=310mW,NF=2.5,SS#1	2N5458	MOT	4901-05-4580	1.000
R01 R02	RES,C,1/4W,5%,75	CR1/4-75	ASE	4700-15-7509	2.000
R03 R04 R05 R25	RES,C,1/4W,5%,220	CF1/4-220	ASE	4700-15-2200	4.000
R06 R07	RES,C,1/4W,5%,270K	CF1/4-270K	ASE	4700-15-2703	2.000
R08 R09 R17 R18 R22	RES,C,1/4W,5%,10K	CF1/4-10K	ASE	4700-15-1002	5.000
R10	RES,C,1/8W,5%,6.8K	CF1/8-6.8K	ASE	4700-05-6801	1.000
R11 R12	RES,C,1/4W,5%,470K	CF1/4-470K	ASE	4700-15-4703	2.000
R13 R14	RES,C,1/8W,5%,20K	CF1/8-20K	ASE	4700-05-2002	2.000
R15 R16	RES,C,1/4W,5%,5.6K	CF1/4-5.6K	ASE	4700-15-5601	2.000
R19 R20 R21 R24 R28	RES,C,1/8W,5%,10K	CF1/8-10K	ASE	4700-05-1002	5.000
R23 R39	TRM,CM,L,10K,10%,PC 15T,PN,CW,.250W,.19W .75L,SA	89PR10K	BEK	4610-00-2103	2.000

REFERENCE DESIGNATORS	PART DESCRIPTION	ORIG-MFGR-PART-NO	MFGR	WAVETEK NO.	QTY
R26 R27 R30 R56 R57 R58 R59 R60 R61 R62 R63	RES,C,1/4W,5%,10	CF1/4-10	ASE	4700-15-1009	11.000
R29	RES,C,1/8W,5%,56K	CF-1/8-56K	ASE	4700-05-5602	1.000
R31	RES,C,1/8W,5%,10	CF1/8-10	ASE	4700-05-1009	1.000
R32	RES,C,1/4W,5%,100K	CF1/4-100K	ASE	4700-15-1003	1.000
R33 R48 R55	RES,MF,1/8W,1%,3.01K	RN55D-3.01K	MILSP	4701-03-3011	3.000
R34 R36 R37	RES,C,1/4W,5%,2K	CF1/4-2K	ASE	4700-15-2001	3.000
R35	RES,C,1/4W,5%,3K	CF1/4-3K	ASE	4700-15-3001	1.000
R38	RES,C,1/4W,5%,100	CF1/4-100	ASE	4700-15-1000	1.000
R40	RES,C,1/4W,5%,1.2K	CF1/4-1.2K	ASE	4700-15-1201	1.000
R41 R42 R43 R46 R47	RES,C,1/4W,5%,6.2K	CF1/4-6.2K	ASE	4700-15-6201	5.000
R44 R45	RES,MF,1/8W,1%,7.5K	RN55D-7.5K	MILSP	4701-03-7501	2.000
R49	RES,MF,1/8W,1%,4.32K	RN55D-4.32K	MILSP	4701-03-4321	1.000
R50	RES,MF,1/8W,1%,1.58K	RN55D-1.58K	MILSP	4701-03-1581	1.000
R51	RES,MF,1/8W,1%,2.15K	RN55D-2.15K	MILSP	4701-03-2151	1.000
R52	RES,MF,1/8W,1%,1.43K	RN55D-1.43K	MILSP	4701-03-1431	1.000
R53	RES,MF,1/8W,1%,1.82K	RN55D-1.82K	MILSP	4701-03-1821	1.000
R54	RES,MF,1/8W,1%,768	RN55D-768	MILSP	4701-03-7680	1.000
R64	RES,C,1/8W,5%,56	CF1/8-56	ASE	4700-05-5609	1.000
T01	RF XFMR FROM:1813-00-0008	1210-41-0006	W-I	1210-41-0006	1.000

REFERENCE DESIGNATORS	PART DESCRIPTION	ORIG-MFGR-PART-NO	MFGR	WAVETEK NO.	QTY
2	INDEX STUD	A001-009	W-I	1410-00-2680	1.000
3	NUT,6-32X1/4HN101-600	8005NP	F-S	2810-14-6100	1.000
4	INT,LOWASHER,6 HW101-600	1304ZP	F-S	2810-24-6000	1.000
C01 C02	CAP,FT,500V,6.8PF	54-794-010-X5E0-689M	SPEC	1510-30-1689	2.000

WAVETEK PARTS LIST	DUMMY BASE, FOR M119	1118-00-0048 PAGE: 1	C REV

REFERENCE DESIGNATORS	PART DESCRIPTION	ORIG-MFGR-PART-NO	MFGR	WAVETEK NO.	QTY
21	CRT FACEPLACE, 1865	1410-30-1700	W-I	1410-30-1700	1.000
R75	POT,CM,L,250K,10%,PL 1T,LG,CW,.500D,.453T .25B,.125SD,.437SL	WA2G028S254UA	A-B	4610-14-4254	1.000

WAVETEK PARTS LIST	FRONT PANEL ASY,1865	1118-40-0043 PAGE: 1	B REV

REFERENCE DESIGNATORS	PART DESCRIPTION	ORIG-MFGR-PART-NO	MFGR	WAVETEK NO.	QTY
MNONE	SUN SHIELD R SIDE	1410-30-1650	W-I	1410-30-1650	1.000

WAVETEK PARTS LIST	SUN SHIELD ASSY,1865	1216-00-0013 PAGE: 1	A REV

REFERENCE DESIGNATORS	PART DESCRIPTION	ORIG-MFGR-PART-NO	MFGR	WAVETEK NO.	QTY
3	BELT BAR RETNR. PER B/P	1410-01-0510	W-I	1410-01-0510	4.000
4	STRIP,STRAP RET,1865	1216-00-0008	W-I	1216-00-0008	4.000
7	STRIP,FRONT NUT TOP/BOT PER B/P	1410-01-0930	W-I	1410-01-0930	2.000
8	FRONT SIDE NUT STRIP PER B/P	1410-01-0500	W-I	1410-01-0500	2.000
9	STRIP, BACK NUT TOP/BOT PER B/P	1410-01-0940	W-I	1410-01-0940	2.000
10	STRIP-BCK.SIDE NUT PER B/P	1410-01-0530	W-I	1410-01-0530	2.000
15	PLATE,VELCR MTG,1865	VELCR MTG PL	W-I	1216-00-0007	2.000
16	WASHER,10,1/2 IN O.D	1411-NP	F-S	2810-26-0014	4.000
22	SCREW,10-32X5/8,PAN, PHILLIPS,NP STEEL	19087-NP	F-S	2810-23-0029	16.000
23	SCREW,10-32X1/2,FH PHILLIPS,BLACK	18286-BLK.OX.	F-S	2810-23-0028	8.000
24	NUT,HEX,#10-32,NP	8011-NP	F-S	2810-16-0015	8.000
25	LOCKWASHER,10,SPRING	1362-NP	F-S	2810-28-0033	8.000
28	WASHER,FLAT,4	1403ZP	F-S	2810-26-4000	2.000
29	HARN ASSY,CASE,1865	1216-00-0004	W-I	1216-00-0004	1.000
33	VELCRO SHLD HOLDER REF3210-99-0030	1410-01-0650	W-I	1410-01-0650	1.000
35	POP RIVET,1/8 DIA	5X521	DAYTN	2810-30-0010	18.000

REFERENCE DESIGNATORS	PART DESCRIPTION	ORIG-MFGR-PART-NO	MFGR	WAVETEK NO.	QTY
2	HOUSING CVR. PER B/P	1410-80-0560	W-I	1410-80-0560	1.000
13	CLAMP,BELT END	1410-01-0960	W-I	1410-01-0960	5.000
14	BACK UP PLT.PER B/P	1410-01-0570	W-I	1410-01-0570	5.000
17	HANDLE,HSNG COV,1865	1216-00-0005	W-I	1216-00-0005	1.000
18	HINGE BELT PER B/P REF:3210-99-0032	1410-01-0610	W-I	1410-01-0610	2.000
24	NUT,HEX,#10-32,NP	8011-NP	F-S	2810-16-0015	6.000
25	LOCKWASHER,10,SPRING	1362-NP	F-S	2810-28-0033	6.000
26	COVER GASKET PER B/P REF: 3210-06-0027	1410-01-0480	W-I	1410-01-0480	1.000
27	VELWASHER PER B/P	1410-01-0640	W-I	1410-01-0640	1.000
28	WASHER,FLAT,4	1403ZP	F-S	2810-26-4000	2.000
30	BUMPER-CONTROL PANEL SWITCH 1865/1880	BUMPER CNTRL PANEL SW	W-I	1414-00-1012	1.000
31	STRAP ASSY,STRG,1865	1216-00-0006	W-I	1216-00-0006	1.000
32	BELT END STRIPPER B/P	1410-01-0490	W-I	1410-01-0490	5.000
35	POP RIVET,1/8 DIA	5X521	DAYTN	2810-30-0010	2.000

REFERENCE DESIGNATORS	PART DESCRIPTION	ORIG-MFGR-PART-NO	MFGR	WAVETEK NO.	QTY
1	SOCKETMC000-002	016-2604-000-599	SEL	2112-00-0002	23.000
2	GROUND LUG,#6,INT HG102-600	3B-111	F-S	2112-03-0003	1.000
3	MAIN UNIT CHAS B/P	1410-80-0430	W-I	1410-80-0430	1.000

WAVETEK PARTS LIST	CHASSIS ASSY,1865	1216-40-0030 PAGE: 1	B REV

REFERENCE DESIGNATORS	PART DESCRIPTION	ORIG-MFGR-PART-NO	MFGR	WAVETEK NO.	QTY
S05	SWITCH,TOGGLE ST003-006	7201P3NYZQ	C-K	5106-00-0012	1.000

WAVETEK PARTS LIST	CARD CG/MTHR BD ASSY	1216-40-0032 PAGE: 1	E REV

REFERENCE DESIGNATORS	PART DESCRIPTION	ORIG-MFGR-PART-NO	MFGR	WAVETEK NO.	QTY
1	TERM,MINI-PVMC000-092	47217	BER	2113-20-0001	10.000

WAVETEK PARTS LIST	MODULE HARNESS, 1865	1219-00-0164 PAGE: 1	C REV

REFERENCE DESIGNATORS	PART DESCRIPTION	ORIG-MFGR-PART-NO	MFGR	WAVETEK NO.	QTY
P02	FUSEHLDR/LINE RECEPT	6J1	CCM	2410-05-0017	1.000
R34 R46 R52	POT,CC,L,50K,10%,PL 1T,LG,CW,.500D,.469T .25B,.125SD,.50SL	WA2G0325503UA	A-B	4610-10-8503	3.000
S03	SWITCH,TOG,BLK ANOD. ST001-006	7101P3NYZQ	C-K	5106-00-0009	1.000

WAVETEK PARTS LIST	RP ASSY,4601	1216-00-0165 PAGE: 1	REV

REFERENCE DESIGNATORS	PART DESCRIPTION	ORIG-MFGR-PART-NO	MFGR	WAVETEK NO.	QTY
R101 R102 R103	(D)POT/SWITCH,10K	11M141	A-B	4610-31-7103	3.000
S101	SWITCH,ASSY,ROTARY SR000-022	71-AD36-01-1-AJN	G-H	5104-00-0009	1.000

WAVETEK PARTS LIST	(D)CARD CHASSIS AY,4601	1216-00-0166 PAGE: 1	A REV

REFERENCE DESIGNATORS	PART DESCRIPTION	ORIG-MFGR-PART-NO	MFGR	WAVETEK NO.	QTY
1	ATTEN 7510-05	7510-05	W-I	1113-20-0046	1.000
2	ATTEN 7550-04	7550-04	W-I	1113-20-0047	1.000
3	ATTENUATOR/KEYBOARD HARNESS 1865	WY1865-ATT/KEYBD	W-I	1219-00-0165	1.000

WAVETEK PARTS LIST	ATTEN ASSY, 1865	1219-00-0168 PAGE: 1	A REV

REFERENCE DESIGNATORS	PART DESCRIPTION	ORIG-MFGR-PART-NO	MFGR	WAVETEK NO.	QTY
C47	CAP,MON,50V,1UF	3420-050-E105M	AER	1510-11-3105	1.000
Q07	NPN,TO-126,POWER F=40,V=80,Icbo=.1uA P=15W,hFE=25, SS#2	MJE242	MOT	4902-00-2420	1.000
Q13	FET-N,TO-202,POWER V=40,Id=1.4,P=15WSS#2	VN46AF	SCX	4902-00-0460	1.000
R01 R31	RES,C,1/4W,5%,330	CF1/4-330	ASE	4700-15-3300	2.000
R21	RES,C,1/4W,5%,1M	CF1/4-1M	ASE	4700-15-1004	1.000
R41	RES,C,1/2W,5%,27	EB2705	A-B	4700-25-2709	1.000
R74	RES,C,1/4W,5%,330K	CF1/4-330K	ASE	4700-15-3303	1.000

WAVETEK PARTS LIST	CRT ASSEMBLY, 1865	1219-00-0172 PAGE: 1	D REV

REFERENCE DESIGNATORS	PART DESCRIPTION	ORIG-MFGR-PART-NO	MFGR	WAVETEK NO.	QTY
1	MODIFIED CAN PER B/P FROM:3210-08-0003	1410-01-1420	W-I	1410-01-1420	1.000
2	FISH PAPER PER B/P	1410-01-1410	W-I	1410-01-1410	1.000
3	PC BD, Z1006 . FROM:3210-05-0044	Z1006	W-I	1710-00-3440	1.000
4	STRAIN REL. BUSHING HB104-002	SR-5P-4 BLK	HEY	2810-37-0001	2.000
8	COVER	HU6729CA-HT	HUD	3210-08-0004	1.000
11	DECAL,MODEL NO, BC-2	MDB-26	W-I	2410-04-0419	1.000
C01	CAP,ELEC,25V,100UF TAPE AND REEL	TE1211	SPR	1510-20-4101	1.000
CR01	DIODE,RECT,GP AXIAL,V=200,IO=5.0A SUR I=225A,SS#2	1N5624	G-E	4806-01-5624	1.000
P01	PLUG,ACCESSORY 6-12V	20/2 SPT-1 W/#6 PLUG	AMELC	2112-32-0002	1.000
R01	RES,WW,5W,5%,.1	45JR10	OHM	4702-65-1007	1.000

WAVETEK PARTS LIST	BATT INTFC,BC2-1865	1019-00-0194 PAGE: 1	A REV

REFERENCE DESIGNATORS	PART DESCRIPTION	ORIG-MFGR-PART-NO	MFGR	WAVETEK NO.	QTY
6	TERM,FEMALE	350388-1	AMP	2113-30-0001	2.000
10	HEATER CORD,2 COND, 18 GA.	19328	BEL	6014-51-8000	42.000
J02	CONN,FEM,PER B/P FROM:2113-29-0001	2113-29-0003	W-I	2113-29-0003	1.000

WAVETEK PARTS LIST	BC-2 HEATER CORD SET	1219-40-0089 PAGE: 1	REV

SECTION 7

OPTIONAL EQUIPMENT PARTS LIST

		PAGE
PLT CAR NOTCH, M113	1114-00-0154	7-3
OPT B-7, BATT BACK UP	1019-00-0072	7-4
BATT BACK-UP, M152	1114-00-9001	7-5
PC ASSY, M152	1218-00-9002	7-6
OPT DP-5, DUAL PILOT	1019-00-0187	7-7
PSK MODULATOR,M135-5	1114-00-0354	7-8
CABLE ASSY, 3 ½ IN	1217-70-0061	7-9
PC ASSY, M135-5	1218-00-0473	7-10
SWITCH PC ASSY, M135-155	1218-00-1341	7-13
OPT DP-155,DUAL PILOT	1019-00-0189	7-14
PSK MODULATOR,M135-155	1114-00-0357	7-15
PC ASSY, M135-155	1218-00-0471	7-16
SWITCH PC ASSY, M135-155	1218-00-1341	7-19
OPT DP-5,DUAL PILOT	1019-00-0190	7-20
PSK DEMODULATOR,M119-5	1114-00-0350	7-21
MODULE ASSY,M119-DP	1216-40-0024	7-22
CABLE ASSY, 3 ½ IN	1217-70-0061	7-23
AMP BD,M119-5	1218-00-0433	7-24
OSC BD,M119-5	1218-00-0443	7-25
PHASE LK BD,M119-5	1218-00-0453	7-26
OPT DP-155,DUAL PILOT	1019-00-0192	7-28
PSK DEMODULATOR,M119-155	1114-00-0353	7-29
AMP ASSY,M119-155	1218-00-0431	7-30
OSC ASSY,M119-155	1218-00-0441	7-31
PHASE LOCK BD,M119	1218-00-0450	7-32

		PAGE
SWITCH PC ASSY,M119-155	1218-00-1340	7-34
K022,CD RDR,PD KIT	1019-00-9001	7-35
PC ASSY,CD RDR OPT	1110-00-9001	7-36
OPT/INTFC BD	1110-00-9002	7-37
CASE/CHAS INTFC BD	1110-00-9003	7-38
NUT PLATE ASSY	1111-00-9001	7-39
CS/CHS INFC HARNESS	1219-40-0085	7-40
CHA/OPT BD,INFC HARN	1219-40-0086	7-41
CARD READER ASSY	1118-00-9001	7-42
CHASSIS, CD RDR	1216-00-9001	7-43
MTG PLATE ASSY	1216-00-9002	7-44
CONN ASSY	1216-00-9003	7-45
PC ASSY,CD RDR	1218-00-9001	7-46
HARNESS,CRW-1	1219-00-9001	7-48
PC ASY, SAN/LITH BATT	1110-40-9031	7-49
AC PWR SUPPLY,BC	1019-00-0177	7-51
HARNESS,BC-3-A	1219-00-0324	7-52
HARNESS,BC-3-C	1219-00-0326	7-53

REFERENCE DESIGNATORS	PART DESCRIPTION	ORIG-MFGR-PART-NO	MFGR	WAVETEK NO.	QTY
5	SCW,SBH,2-56X1/4	4002NP	F-S	2810-17-2104	1.000
7	SCW,SBH,2-56X3/8	4004NP	F-S	2810-17-2106	4.000
8	SPACER,NYLON,#2,3/16	SPNY-003NA	WHBRY	2810-05-0011	4.000
9	LOWASHER,INT 2	1330NP	F-S	2810-24-2000	4.000

WAVETEK PARTS LIST	PLT CAR NOTCH,M113	1114-00-0154 PAGE: 1	J REV

REFERENCE DESIGNATORS	PART DESCRIPTION	ORIG-MFGR-PART-NO	MFGR	WAVETEK NO.	QTY
ZA1	BATT BACK-UP, M152	M152	W-I	1114-00-9001	1.000

WAVETEK PARTS LIST	OPT B-7,BATT BACK-UP	1019-00-0072 PAGE: 1	REV

REFERENCE DESIGNATORS	PART DESCRIPTION	ORIG-MFGR-PART-NO	MFGR	WAVETEK NO.	QTY
2	CABLE TIE,4	PLTIM-MP	PAND	2810-00-0010	1.000
8	SCW,SBH,4-40X3/16	4021NP-3/16	F-S	2810-17-4103	1.000
BT01	BATT,AA,NICD,1.2 V	K01A111AA-GTI	GE	4010-00-0006	1.000
T01	RF XFMR,PER B/P	1810-06-0006	W-I	1810-06-0006	1.000
ZA1	PC ASSY, M152	M152-PC	W-I	1218-00-9002	1.000

REFERENCE DESIGNATORS	PART DESCRIPTION	ORIG-MFGR-PART-NO	MFGR	WAVETEK NO.	QTY
1	PC BOARD, Z1007	Z1007	W-I	1710-00-3610	1.000
C01	CAP,ELECT,16V,100UF	TT12X100	MAL	1510-21-2101	1.000
C02	CAP,MON,50V,1UF	3420-050-E105M	AER	1510-11-3105	1.000
CR01 CR03	DIODE,SIGNAL,GP AXIAL,V=75V,IO=10mA CT=4pF,SS#2	1N914	G-E	4807-01-0914	2.000
CR02	DIODE,RECT,GP DO-15,V=400V,IO=1.0A SUR I=30A,SS#2	1N4004	P-C	4806-01-4004	1.000
Q01 Q03	PNP,TO-92,GP AMP/SW F=300,V=40,Icex=50nA P=625mW,hFE=100,SS#2	2N3906	T-I	4901-03-9060	2.000
Q02 Q04	NPN,TO-92,GP AMP/SW F=300,V=40,Icex=50nA P=625mW,hFE=100,SS#2	2N3904	NAT	4901-03-9040	2.000
R01 R03	RES,C,1/4W,5%,1.5K	CF1/4-1.5K	ASE	4700-15-1501	2.000
R02	TRM,CM,L,1K,20%,PC 2T,PN,CW,.375H,.15W .350L,TA	91AR1K	BEK	4610-00-7102	1.000
R04	RES,C,1/4W,5%,22	CF1/4-22	ASE	4700-15-2209	1.000
R05	RES,C,1/4W,5% 1.3K	CF1/4-1.3K	ASE	4700-15-1301	1.000
R06	RES,C,1/4W,5%,3.9K	CF1/43.9K	ASE	4700-15-3901	1.000
R07	RES,C,1/4W,5%,91	CF1/4-91	ASE	4700-15-9109	1.000
R08	RES,C,1/4W,5%,15K	CF1/4-15K	ASE	4700-15-1502	1.000
VR01	IC,2.5VOLT REF STATIC SENSITIVE #2	LM336Z	NAT	7000-03-3600	1.000

WAVETEK PARTS LIST	PC ASSY, M152	1218-00-9002 PAGE: 1	B REV

REFERENCE DESIGNATORS	PART DESCRIPTION ><	ORIG-MFGR-PART-NO	MFGR	WAVETEK NO.	QTY
1	PSK MODULATORM135-5	M135-5	W-I	1114-00-0354	1.000
W06	CABLE ASSY, 3 1/2 IN	WX1865-W4	W-I	1217-70-0061	1.000

WAVETEK PARTS LIST	OPT DP-5, 1855	1019-00-0187 PAGE: 1	A REV

REFERENCE DESIGNATORS	PART DESCRIPTION	ORIG-MFGR-PART-NO	MFGR	WAVETEK NO.	QTY
1	SWITCH PC ASSY M135-155	M135-155-SW BD	W-I	1218-00-1341	1.000
2	PC ASSY, M135-5	M135-5-PC	W-I	1218-00-0473	1.000
CR09 CR10	DIODE,RECT,GP DO-15,V=400V,IO=1.0A SUR I=30A,SS#2	1N4004	P-C	4806-01-4004	2.000
J03 J04	PV JUMPER	65474-002	BER	2112-10-0002	2.000
L01 L02	TOROID,10T,1-1/4L	LA009-010-1	W-I	1810-05-0004	2.000
L10	CHOKE,COATED,2.7UH 10%,D=0.120IN L=0.300IN,I=355MA	08N2R7	JEF	1810-03-0279	1.000
MX01	MIXER,DBL.BALANCED	CM-1	VARIL	3010-54-0001	1.000
R53	RES,C,1/8W,5%,27	BB 2705	A-B	4705-05-2709	1.000
R57 R58	RES,C,1/8W,5%,430	BB4315	A-B	4705-05-4300	2.000
X1	CRYSTAL, 5.00000MHZ	X32W-5.00000	W-I	2310-00-0911	1.000

REFERENCE DESIGNATORS	PART DESCRIPTION	ORIG-MFGR-PART-NO	MFGR	WAVETEK NO	QTY
1	CONN JF000-008	27-25	APL	2110-03-1004	2.000

WAVETEK PARTS LIST	CABLE ASSY, 3 1/2 IN	1217-70-0061 PAGE: 1	REV

REFERENCE DESIGNATORS	PART DESCRIPTION	ORIG-MFGR-PART-NO	MFGR	WAVETEK NO.	QTY
C03 C04 C17 C18	CAP,MON,50V,1UF	3420-050-E105M	AER	1510-11-3105	4.000
C07 C08	CAP,DISC,1KV,10PF TAPE AND REEL	10TCC-Q10	SPR	1510-10-0100	2.000
C09 C10 C24 C25	CAP,DISC,100V,.01UF TAPE AND REEL	68U103M	MDC	1510-10-2103	4.000
C11 C28 C29	CAP,DISC,1KV,.001UF TAPE AND REEL	5GAD10	SPR	1510-10-1102	3.000
C12	CAP,MICA,500V,160PF	DM15-161J	ARC	1510-50-0161	1.000
C13 C19 C20 C26	CAP,DISC,1KV,470PF TAPE AND REEL	60U471M	MDC	1510-10-1471	4.000
C14	CAP,DISC,1KV,1200PF	5GA-D12	SPR	1510-10-1122	1.000
C16	CAP,TANT,25V,10UF	100DE106M20C2	ACI	1510-21-7100	1.000
C21	CAP,MICA,500V,330PF	DM15-331J	ARC	1510-50-0331	1.000
C22	CAP,MICA,300V,47PF	ADM-5-470J	ARC	1510-50-1470	1.000
C23	CAP,MICA,500V,470PF	DM15-471J	ARC	1510-50-0471	1.000
C27	CAP,MICA,500V,100PF	CD15-FD101J03	C-D	1510-50-0101	1.000
CR01 CR07	DIODE,SIGNAL,GP AXIAL,V=75V,IO=10mA CT=4pF,SS#2	1N914	G-E	4807-01-0914	2.000
CR02 CR03	DIODE,SCHOTTKY,LOW OFFSET AXIAL,V=5V CT=1.0pF,SS#1	5082-2835	H-P	4809-02-0002	2.000
CR04 CR05 CR06	DIODE,PIN,GP SWIT AXIAL,V=200V CT=0.3pF,SS#2	MA47047	M-A	4805-02-0003	3.000
CR08	DIODE,RECT,GP DO-15,V=400V,IO=1.0A SUR I=30A,SS#2	1N4004	P-C	4806-01-4004	1.000
IC01	OP AMP STATIC SENSITIVE #2	N5741CV	SIG	7000-57-4100	1.000
L03 L06	TOROID,10T,1L	LA009-010-3	W-I	1810-05-0006	2.000
L04	CHOKE,COATED,4.7UH 10%,D=0.120IN L=0.300IN,I=230MA	08N4R7	JEF	1810-03-0479	1.000
L05 L09	CHOKE,COATED,1UH,10% D=0.120IN,L=0.300IN, I=385MA	08N1R0	JEF	1810-03-0010	2.000
L07 L13	CHOKE,COATED,2.2UH 10%,D=0.120IN L=0.300IN,I=395MA	08N2R2	JEF	1810-03-0229	2.000
L08	CHOKE,COATED,1.2UH 10%,D=0.120IN L=0.300IN,I=590MA	08N1R2	JEF	1810-03-0129	1.000

REFERENCE DESIGNATORS	PART DESCRIPTION	ORIG-MFGR-PART-NO	MFGR	WAVETEK NO.	QTY
L11	CHOKE,COATED,0.82UH 10%,D=0.120IN L=0.300IN,I=415MA	08NR82	JEF	1810-03-0828	1.000
L12	CHOKE,MOLDED,510UH	2500-15	DEL	1810-01-5100	1.000
P02 P03	HEADER,STRT,2 PIN REF:2112-07-0000	65501-402	BER	2112-07-0007	2.000
Q01 Q03	NPN,TO-92,GP AMP/SW F=300,V=40,Icex=50nA P=625mW,hFE=100,SS#2	2N3904	NAT	4901-03-9040	2.000
Q02 Q04	PNP,TO-92,GP AMP/SW F=250,V=40,Icex=50nA P=625mW,hFE=50,SS#2	2N3905	NAT	4901-03-9050	2.000
Q05 Q06	NPN,TO-72,UHF AMP VCBO=15V,IC=25mA P=200mW,hFE=25,SS#2	2N5053	APX	4901-05-0530	2.000
R01	RES,C,1/4W,5%,1.5K	CF1/4-1.5K	ASE	4700-15-1501	1.000
R02 R11 R34 R44	RES,C,1/4W,5%,1K	CF1/4-1K	ASE	4700-15-1001	4.000
R03 R05	RES,C,1/4W,5%,27K	CF1/4-27K	ASE	4700-15-2702	2.000
R04	RES,C,1/4W,5%,3K	CF1/4-3K	ASE	4700-15-3001	1.000
R06 R17	RES,C,1/4W,5%,15K	CF1/4-15K	ASE	4700-15-1502	2.000
R07	RES,C,1/4W,5%,430K	CF1/4-430K	ASE	4700-15-4303	1.000
R08	RES,C,1/4W,5%,82	CF1/4-82	ASE	4700-15-8209	1.000
R09 R13 R37 R45 R46	RES,C,1/4W,5%,10	CF1/4-10	ASE	4700-15-1009	5.000
R10 R12 R14	RES,C,1/4W,5%,2K	CF1/4-2K	ASE	4700-15-2001	3.000
R15 R32	RES,C,1/4W,5%,100	CF1/4-100	ASE	4700-15-1000	2.000
R16 R28	RES,C,1/4W,5%,9.1K	CF1/4-9.1K	ASE	4700-15-9101	2.000
R18 R35 R48	RES,C,1/4W,5%,6.8K	CF1/4-6.8K	ASE	4700-15-6801	3.000
R19 R29	TRM,CM,L,10K,10%,PC 15T,PN,CW,.250W,.19W .75L,SA	89PR10K	BEK	4610-00-2103	2.000
R20	RES,C,1/4W,5%,39K	CF1/4-39K	ASE	4700-15-3902	1.000
R21 R36 R51	RES,C,1/4W,5%,470	CF1/4-470	ASE	4700-15-4700	3.000
R22	RES,C,1/8W,5%,33	CF-1/8-33	ASE	4700-05-3309	1.000
R23 R25 R41 R42	RES,C,1/4W,5%,200	CF1/4-200	ASE	4700-15-2000	4.000
R24	RES,C,1/4W,5%,62	CF1/4-62	ASE	4700-15-6209	1.000
R26 R27	RES,C,1/8W,5%,150	CF1/8-150	ASE	4700-05-1500	2.000
R30	RES,C,1/4W,5%,20K	CF1/4-20K	ASE	4700-15-2002	1.000
R31	RES,C,1/4W,5%,10K	CF1/4-10K	ASE	4700-15-1002	1.000

REFERENCE DESIGNATORS	PART DESCRIPTION	ORIG-MFGR-PART-NO	MFGR	WAVETEK NO.	QTY
R33 R47	RES,C,1/4W,5%,100K	CF1/4-100K	ASE	4700-15-1003	2.000
R38	RES,C,1/4W,5%,2.2K	CF1/4-2.2K	ASE	4700-15-2201	1.000
R39 R40 R52	RES,C,1/4,5%,27	CF1/4-27	ASE	4700-15-2709	3.000
R43	RES,C,1/4W,5%,330	CF1/4-330	ASE	4700-15-3300	1.000
R49	RES,C,1/4W,5%,390	CF1/4-390	ASE	4700-15-3900	1.000
R50	RES,C,1/4W,5%,68	CF1/4-68	ASE	4700-15-6809	1.000
T01 T02	RF XFMR FROM:1813-00-0008	1210-41-0007	W-I	1210-41-0007	2.000

REFERENCE DESIGNATORS	PART DESCRIPTION	ORIG-MFGR-PART-NO	MFGR	WAVETEK NO	QTY
C401 C402 C403 C404 C405 C406 C407	CAP,CHIP,.1 UF TAPE AND REEL	51C1209-B104Z	CFI	1510-00-3104	7.000
CR401 CR402 CR403 CR404	DIODE,SWITCHING,VHF DO-34,V=35,IF=100mA CT=0.8pF,SS#2	BA482	APX	4812-02-0004	4.000
R401 R405	RES,C,1/8W,5%,1K RC101-210 .	CF1/8-1K	ASE	4700-05-1001	2.000
R402 R403 R404	RES,C,1/8W,5%,2K	CF1/8-2K	ASE	4700-05-2001	3.000

WAVETEK PARTS LIST	SWITCH PC ASSY M135-155	1218-00-1341 PAGE: 1	A REV

REFERENCE DESIGNATORS	PART DESCRIPTION	ORIG-MFGR-PART-NO	MFGR	WAVETEK NO.	QTY
1	PSK MODULATORM135-155	M135-155	W-I	1114-00-0357	1.000
W06	CABLE ASSY, 3 1/2 IN	WX1865-W4	W-I	1217-70-0061	1.000

WAVETEK PARTS LIST	OPT DP-155, 1855	1019-00-0189 PAGE: 1	A REV

REFERENCE DESIGNATORS	PART DESCRIPTION	ORIG-MFGR-PART-NO	MFGR	WAVETEK NO.	QTY
C26	CAP,COMP,500V,.62PF	MC-.62PF	Q-C	1510-40-1628	1.000
CR09 CR10	DIODE,RECT,GP DO-15,V=400V,IO=1.0A SUR I=30A,SS#2	1N4004	P-C	4806-01-4004	2.000
J02	PV JUMPER	65474-002	BER	2112-10-0002	1.000
L01 L02	TOROID,10T,1-1/4L	LA009-010-1	W-I	1810-05-0004	2.000
L10	COIL,4-1/2T,#22 .200 ID,1/4 LEADS	1815-00-0017	W-I	1815-00-0017	1.000
L12	RF XFMR FROM:1813-00-0007	1810-06-0001	W-I	1810-06-0001	1.000
MX1	MIXER,DBL.BALANCED	CM-1	VARIL	3010-54-0001	1.000
R28	RES,C,1/8W,5%,27	BB 2705	A-B	4705-05-2709	1.000
R57 R58	RES,C,1/8W,5%,430	BB4315	A-B	4705-05-4300	2.000
T03	RF XFMR FROM:1813-00-0001	1210-42-0029	W-I	1210-42-0029	1.000
X1	CRYSTAL,51.66666 MHZ	X33W-51.66666	W-I	2310-00-0871	1.000

REFERENCE DESIGNATORS	PART DESCRIPTION	ORIG-MFGR-PART-NO	MFGR	WAVETEK NO.	QTY
C03 C04 C17 C18	CAP,MON,50V,1UF	3420-050-E105M	AER	1510-11-3105	4.000
C07 C08	CAP,DISC,1KV,10PF TAPE AND REEL	10TCC-Q10	SPR	1510-10-0100	2.000
C09	CAP,MICA,300V,150PF	DM15-151J	ARC	1510-50-1151	1.000
C10 C27 C28 C29 C30	CAP,DISC,1KV,.001UF TAPE AND REEL	5GAD10	SPR	1510-10-1102	5.000
C11	CAP,MICA,300V,20PF	ADM-5-200J	ARC	1510-50-1200	1.000
C12	CAP,MICA,500V,120PF	DM15-121J	ARC	1510-50-0121	1.000
C13	CAP,MICA,300V,15PF	DM-5CC150J	ARC	1510-50-1150	1.000
C14	CAP,MICA,300V,27PF	DM15-270J	ARC	1510-50-1270	1.000
C16	CAP,TANT,25V,10UF	100DE106M20C2	ACI	1510-21-7100	1.000
C19 C20	CAP,DISC,1KV,470PF TAPE AND REEL	60U471M	MDC	1510-10-1471	2.000
C21	CAP,MICA,300V,8PF	DM-5CC080D	ARC	1510-50-1809	1.000
C22	CAP,COMP,500V,.75PF	MC-.75PF	Q-C	1510-40-1758	1.000
C23	CAP,MICA,300V,12PF	DM-5CC120J	ARC	1510-50-1120	1.000
C24 C25	CAP,DISC,1KV,.01UF	5GA-S10	SPR	1510-10-1103	2.000
C31	CAP,COMP,500V,2PF	QC-2.0PF	Q-C	1510-40-0020	1.000
C32	CAP,MICA,300V,24PF	ADM-5-240J	ARC	1510-50-1240	1.000
CR01 CR07	DIODE,SIGNAL,GP AXIAL,V=75V,IO=10mA CT=4pF,SS#2	1N914	G-E	4807-01-0914	2.000
CR02 CR03	DIODE,SCHOTTKY,LOW OFFSET AXIAL,V=5V CT=1.0pF,SS#1	5082-2835	H-P	4809-02-0002	2.000
CR04 CR05 CR06	DIODE,PIN,GP SWIT AXIAL,V=200V CT=0.3pF,SS#2	MA47047	M-A	4805-02-0003	3.000
CR08	DIODE,RECT,GP DO-15,V=400V,IO=1.0A SUR I=30A,SS#2	1N4004	P-C	4806-01-4004	1.000
IC01	OP AMP STATIC SENSITIVE #2	N5741CV	SIG	7000-57-4100	1.000
L03	COIL,15T,.2ID,AIR	1815-00-0032	W-I	1815-00-0032	1.000
L04	CHOKE,COATED,2.2UH 10%,D=0.120IN L=0.300IN,I=395MA	08N2R2	JEF	1810-03-0229	1.000
L05 L06	TOROID,10T,1L	LA009-010-3	W-I	1810-05-0006	2.000
L07	COIL,4-1/2T,#22 .200 ID,1/4 LEADS	1815-00-0017	W-I	1815-00-0017	1.000

REFERENCE DESIGNATORS	PART DESCRIPTION	ORIG-MFGR-PART-NO	MFGR	WAVETEK NO.	QTY
L08 L11	COIL,AIR,2T,0.200 ID	2T,PER SPEC.	ATR	1815-00-0001	2.000
L09	COIL,AIR,3T,.200 ID	3T,PER SPEC.	ATR	1815-00-0002	1.000
L13	COIL,AIR,4T,.200 ID	4T,PER SPEC.	ATR	1815-00-0003	1.000
P02	HEADER,STRT,2 PIN REF:2112-07-0000	65501-402	BER	2112-07-0007	1.000
Q01 Q03	NPN,TO-92,GP AMP/SW F=300,V=40,Icex=50nA P=625mW,hFE=100,SS#2	2N3904	NAT	4901-03-9040	2.000
Q02 Q04	PNP,TO-92,GP AMP/SW F=250,V=40,Icex=50nA P=625mW,hFE=50,SS#2	2N3905	NAT	4901-03-9050	2.000
Q05	NPN,TO-72,GP AMP F=60,V=12,Iceo=.02uA P=200mW,NF=4.5,SS#2	2N5179-MOT	MOT	4901-05-1791	1.000
Q06	NPN,TO-72,UHF AMP VCBO=15V,IC=25mA P=200mW,hFE=25,SS#2	2N5053	APX	4901-05-0530	1.000
Q07	NPN,TO-92B,HI FREQ F=100M,V=30,Icbo=.5u P=200m,hFE=7K,SS#2	2N3854A	WALBN	4901-03-8541	1.000
R01	RES,C,1/8W,5%,1.5K	CF 1/8-1.5K	ASE	4700-05-1501	1.000
R02 R18 R55 R56	RES,C,1/8W,5%,1K RC101-210	CF1/8-1K	ASE	4700-05-1001	4.000
R03 R05 R54	RES,C,1/8W,5%,27K	CF 1/8-27K	ASE	4700-05-2702	3.000
R04	RES,C,1/4W,5%,3K	CF1/4-3K	ASE	4700-15-3001	1.000
R06	RES,C,1/4W,5%,15K	CF1/4-15K	ASE	4700-15-1502	1.000
R07	RES,C,1/4W,5%,430K	CF1/4-430K	ASE	4700-15-4303	1.000
R08	RES,C,1/4W,5%,82	CF1/4-82	ASE	4700-15-8209	1.000
R09 R13 R40 R46	RES,C,1/4W,5%,10	CF1/4-10	ASE	4700-15-1009	4.000
R10 R12 R14	RES,C,1/4W,5%,2K	CF1/4-2K	ASE	4700-15-2001	3.000
R11 R34 R44	RES,C,1/4W,5%,1K	CF1/4-1K	ASE	4700-15-1001	3.000
R15	RES,C,1/4W,5%,100	CF1/4-100	ASE	4700-15-1000	1.000
R16 R31	RES,C,1/8W,5%,10K	CF1/8-10K	ASE	4700-05-1002	2.000
R17	RES,C,1/8W,5%,15K	CF 1/8-15K	ASE	4700-05-1502	1.000
R19 R29	TRM,CM,L,10K,10%,PC 15T,PN,CW,.250W,.19W ,75L,SA	89PR10K	BEK	4610-00-2103	2.000
R20	RES,C,1/8W,5%,39K	CF 1/8-39K	ASE	4700-05-3902	1.000
R23 R25	RES,C,1/8W,5%,240	CF1/8-240	ASE	4700-05-2400	2.000

REFERENCE DESIGNATORS	PART DESCRIPTION	ORIG-MFGR-PART-NO	MFGR	WAVETEK NO.	QTY
R24	RES,C,1/8W,5%,51	CF1/8-51	ASE	4700-05-5109	1.000
R26 R27	RES,C,1/8W,5%,150	CF1/8-150	ASE	4700-05-1500	2.000
R30	RES,C,1/8W,5%,20K	CF1/8-20K	ASE	4700-05-2002	1.000
R32	RES,C,1/8W,5%,100 RC101-110	CF1/8-100	ASE	4700-05-1000	1.000
R33	RES,C,1/8W,5%,100K	CF1/8-100K	ASE	4700-05-1003	1.000
R35	RES,C,1/8W,5%,6.8K	CF1/8-6.8K	ASE	4700-05-6801	1.000
R36	RES.C.1/8W 5% 470	CF1/8-470	ASE	4700-05-4700	1.000
R37 R39 R45	RES,C,1/8W,5%,10	CF1/8-10	ASE	4700-05-1009	3.000
R38	RES,C,1/4W,5%,9.1K	CF1/4-9.1K	ASE	4700-15-9101	1.000
R41	RES,C,1/8W,5%,220	CF1/8-220	ASE	4700-05-2200	1.000
R42	RES,C,1/4W,5%,220	CF1/4-220	ASE	4700-15-2200	1.000
R43	RES,C,1/4W,5%,330	CF1/4-330	ASE	4700-15-3300	1.000
R47	RES,C,1/4W,5%,100K	CF1/4-100K	ASE	4700-15-1003	1.000
R48	RES,C,1/4W,5%,6.8K	CF1/4-6.8K	ASE	4700-15-6801	1.000
R49	RES,C,1/8W,5%,390	CF1/8-390	ASE	4700-05-3900	1.000
R50	RES,C,1/8W,5%,68	CF1/8-68	ASE	4700-05-6809	1.000
R51	RES,C,1/4W,5%,470	CF1/4-470	ASE	4700-15-4700	1.000
R52	RES,C,1/4,5%,27	CF1/4-27	ASE	4700-15-2709	1.000
R53	RES,C,1/8W,5%,56	CF1/8-56	ASE	4700-05-5609	1.000
T01 T02	RF XFMR FROM:1813-00-0008	1210-41-0007	W-I	1210-41-0007	2.000

REFERENCE DESIGNATORS	PART DESCRIPTION	ORIG-MFGR-PART-NO	MFGR	WAVETEK NO.	QTY
C401 C402 C403 C404 C405 C406 C407	CAP,CHIP,.1 UF TAPE AND REEL	51C1209-B104Z	CFI	1510-00-3104	7.000
CR401 CR402 CR403 CR404	DIODE,SWITCHING,VHF DO-34,V=35,IF=100mA CT=0.8pF,SS#2	BA482	APX	4812-02-0004	4.000
R401 R405	RES,C,1/8W,5%,1K RC101-210	CF1/8-1K	ASE	4700-05-1001	2.000
R402 R403 R404	RES,C,1/8W,5%,2K	CF1/8-2K	ASE	4700-05-2001	3.000

WAVETEK PARTS LIST	SWITCH PC ASSY M135-155	1218-00-1341 PAGE: 1	A REV

REFERENCE DESIGNATORS	PART DESCRIPTION	ORIG-MFGR-PART-NO	MFGR	WAVETEK NO.	QTY
1	PSK DEMODULATOR, M119-5	M119-5	W-I	1114-00-0350	1.000
W06	CABLE ASSY, 3 1/2 IN	WX1865-W4	W-I	1217-70-0061	1.000

WAVETEK PARTS LIST	OPT DP-5, DUAL PILOT (O)	1019-00-0190 PAGE: 1	REV

REFERENCE DESIGNATORS	PART DESCRIPTION	ORIG-MFGR-PART-NO	MFGR	WAVETEK NO.	QTY
16	SCW,SBH,2-56X3/16	4001NP	F-S	2810-17-2103	15.000
17	LOWASHER,INT 2	1330NP	F-S	2810-24-2000	15.000
20	IC SKT,PC,14 PIN MC000-073	C931402	T-I	2112-00-0011	1.000
21	PCB,IC MTG, A001-007-14 FROM:3210-05-0048	A001-007-14	W-I	1410-00-2660	1.000
23	FISHPAPER;PHASE LOCK PER B/P	A001-963	W-I	1410-00-9440	1.000
24	FISHPAPER; BANDPASS PER B/P	A001-964	W-I	1410-00-9450	1.000
25	OSC FISH PAPER B/P	A001-965	W-I	1410-00-9460	1.000
C13	CAP,TANT,25V,10UF	100DE106M20C2	ACI	1510-21-7100	1.000
CR01 CR02	DIODE,RECT,GP DO-15,V=400V,IO=1.0A SUR I=30A,SS#2	1N4004	P-C	4806-01-4004	2.000
IC01	QUAD NAND STATIC SENSITIVE	MC14011BCP	MOT	8001-40-1112	1.000
L01	TOROID,10T,1-1/2L	LA009-010-2	W-I	1810-05-0005	1.000
L02 L03	TOROID,10T,1-1/4L	LA009-010-1	W-I	1810-05-0004	2.000
L04	CHOKE,COATED,47UH 10%,D=0.120IN L=0.300,I=110MA	08N470	JEF	1810-03-0470	1.000
MX01	MIXER,DBL.BALANCED	CM-1	VARIL	3010-54-0001	1.000
R01	RES,C,1/4W,5%,9.1K	CF1/4-9.1K	ASE	4700-15-9101	1.000
R02	RES,C,1/4W,5%,5.1K	CF1/4-5.1K	ASE	4700-15-5101	1.000
R03	RES,C,1/4W,5%,10K	CF1/4-10K	ASE	4700-15-1002	1.000
R202	RES,C, 1/8W,5%, 5.1K	CF 1/8 -5.1 K	ASE	4700-05-5101	1.000
R205	RES,C,1/8W,5%,20K	CF1/8-20K	ASE	4700-05-2002	1.000
R207	RES,C,1/8W,5%,13	CF-1/8-13	ASE	4700-05-1309	1.000
R209	RES,C,1/8W,5%,1.8K	CF1/8-1.8K	ASE	4700-05-1801	1.000
ZA01	AMP BD, M119-5	M119-5-AMP BD	W-I	1218-00-0433	1.000
ZA02	OSC BD, M119-5	M119-5-OSC BD	W-I	1218-00-0443	1.000
ZA03	PHASE LK BD, M119-5	M119-5-PH LK BD	W-I	1218-00-0453	1.000
ZA04	SWITCH PC ASSY M119-155	M119-155-SW BD	W-I	1218-00-1340	1.000

REFERENCE DESIGNATORS	PART DESCRIPTION	ORIG-MFGR-PART-NO	MFGR	WAVETEK NO.	QTY
1	FRAME,M119-DP FROM:1410-30-0700	1414-30-1019	W-I	1414-30-1019	1.000
2	INT,LOWASHER,6 HW101-600	1304ZP	F-S	2810-24-6000	1.000
3	CONN JF000-004	27-21	APL	2110-03-0001	2.000
4	BASE,M119 FROM:3210-08-0033	1414-30-1018	W-I	1414-30-1018	1.000
5	INDEX STUD	A001-009	W-I	1410-00-2680	1.000
8	SCW,SBH,6-32X3/16	6-32X3/16,BH,NP	S-S	2810-17-6103	1.000
9	PSK DEMOD CHASSIS CTR PLATE B/P	1410-30-1690	W-I	1410-30-1690	1.000
12	SHIELD PER B/P	A001-912	W-I	1410-00-2430	1.000
13	SHIELD PER B/P	A001-913	W-I	1410-00-2440	1.000
14	SHIELD PER B/P	A01-915	W-I	1410-00-2480	1.000
18	STANDOFF, SWAGE, 3/16 X 1/8	SS151-1A-17	UNIC	2810-05-0009	15.000
26	CAP,FT,500V,6.8PF	54-794-010-X5E0-689M	SPEC	1510-30-1689	4.000
27	CAP,FT,500V,1000PF	54-794-010-102P	SPEC	1510-30-8102	3.000
C01 C02 C03	CAP,FT,500V,2200PF	4420-2200PF	AER	1510-31-1222	3.000
C04 C05	CAP,FT,500V,4.7PF	4420-4.7PF	AER	1510-31-4479	2.000

REFERENCE DESIGNATORS	PART DESCRIPTION	ORIG-MFGR-PART-NO	MFGR	WAVETEK NO.	QTY
1	CONN JF000-008	27-25	APL	2110-03-1004	2.000

WAVETEK PARTS LIST	CABLE ASSY, 3 1/2 IN	1217-70-0061 PAGE: 1	REV

REFERENCE DESIGNATORS	PART DESCRIPTION	ORIG-MFGR-PART-NO	MFGR	WAVETEK NO.	QTY
2	TERM,MALE MC000-057	86093-7	AMP	2113-12-0001	1.000
C101 C103 C110 C113	CAP,DISC,100V,.01UF TAPE AND REEL	68U103M	MDC	1510-10-2103	4.000
C102 C111	CAP,DISC,1KV,.001UF TAPE AND REEL	5GAD10	SPR	1510-10-1102	2.000
C104 C112	CAP,MON,50V,1UF	3420-050-E105M	AER	1510-11-3105	2.000
C105	CAP,MICA,100V,200 PF	DM5FA221J	ARC	1510-50-7221	1.000
C106 C108	CAP,COMP,500V,10PF	QC-10PF	Q-C	1510-40-0100	2.000
C107	CAP,MICA,100V,160 PF	DM5FA161J	ARC	1510-50-7161	1.000
C109	CAP,MICA,100V,130PF	ADM-5CA131J	ARC	1510-50-3131	1.000
C114 C115 C116	CAP,VARI,7-35PF,250V CV101-035	7STRIK0-02	STR	1510-70-0350	3.000
L101 L107	TOROID,10T,1-1/4L	LA009-010-1	W-I	1810-05-0004	2.000
L102	CHOKE,COATED,2.7UH 10%,D=0.120IN L=0.300IN,I=355MA	08N2R7	JEF	1810-03-0279	1.000
L103	CHOKE,COATED,1.8UH 10%,D=0.120IN L=0.300IN,I=455MA	08N1R8	JEF	1810-03-0189	1.000
L104	CHOKE,COATED,5.6UH 10%,D=0.120IN L=0.300IN,I=185MA	08N5R6	JEF	1810-03-0569	1.000
L105	CHOKE,COATED,6.8UH 10%,D=0.120IN L=0.300IN,I=175MA	08N6R8	JEF	1810-03-0689	1.000
L106	CHOKE,COATED,0.47UH 10%,D=0.120IN L=0.300IN,I=650MA	08NR47	JEF	1810-03-0478	1.000
Q101 Q102	NPN,TO-72,UHF AMP VCBO=15V,IC=25mA P=200mW,hFE=25,SS#2	2N5053	APX	4901-05-0530	2.000
R101	RES,C,1/8W,5%,6.8K	CF1/8-6.8K	ASE	4700-05-6801	1.000
R102 R106	RES,C,1/8W,5%,20K	CF1/8-20K	ASE	4700-05-2002	2.000
R103 R107	RES,C,1/8W,5%,10	CF1/8-10	ASE	4700-05-1009	2.000
R104 R108	RES,C,1/4W,5%,1K	CF1/4-1K	ASE	4700-15-1001	2.000
R105	RES,C,1/8W,5%,4.7K	CF1/8-4.7K	ASE	4700-05-4701	1.000

REFERENCE DESIGNATORS	PART DESCRIPTION	ORIG-MFGR-PART-NO	MFGR	WAVETEK NO.	QTY
C201	CAP,MON,50V,1UF	3420-050-E105M	AER	1510-11-3105	1.000
C202	CAP,DISC,1KV,.001UF TAPE AND REEL	5GAD10	SPR	1510-10-1102	1.000
C203	CAP,DISC,100V,.01UF TAPE AND REEL	68U103M	MDC	1510-10-2103	1.000
C205	CAP,MICA,300V,30PF	DM-5ED300J	ARC	1510-50-1300	1.000
C206	CAP,MICA,300V,15PF	DM-5CC150J	ARC	1510-50-1150	1.000
C210	CAP,TANT,25V,1UF	100DE105K25A2	ACI	1510-21-7010	1.000
CR201	DIODE,VAR CAP,UHF AXIAL,V=28,IO=20mA SS#2	BB205B	APX	4803-02-0004	1.000
L201 L202	TOROID,10T,1-1/4L	LA009-010-1	W-I	1810-05-0004	2.000
L204	CHOKE,COATED,10UH 10%,D=0.120IN, L=0.300IN,I=130MA	08N100	JEF	1810-03-0100	1.000
Q201	NPN,TO-72,UHF AMP VCBO=15V,IC=25mA P=200mW,hFE=25,SS#2	2N5053	APX	4901-05-0530	1.000
R201	RES,C,1/8W,5%,9.1K	CF1/8-9.1K	ASE	4700-05-9101	1.000
R203	RES.1/8W,5,330	CF1/8-330	ASE	4700-05-3300	1.000
R206	RES,C,1/8W,5%,220	CF1/8-220	ASE	4700-05-2200	1.000
R208	RES,C,1/8W,5%,13	CF-1/8-13	ASE	4700-05-1309	1.000
T201	RF XFMR PER B/P FROM:1813-00-0007	1210-40-0024	W-I	1210-40-0024	1.000

REFERENCE DESIGNATORS	PART DESCRIPTION	ORIG-MFGR-PART-NO	MFGR	WAVETEK NO.	QTY
19	IC SKT,8 PIN	DILB-8P-108	BURND	2112-00-0007	2.000
20	IC SKT,PC,14 PIN MC000-073	C931402	T-I	2112-00-0011	2.000
C301 C302	CAP,MICA,100V,250PF	ADM-10CA251J	ARC	1510-50-5251	2.000
C303	CAP,DISC,1KV,.001UF TAPE AND REEL	5GAD10	SPR	1510-10-1102	1.000
C304 C305 C307 C312 C313 C315 C316 C318	CAP,MON,50V,1UF	3420-050-E105M	AER	1510-11-3105	8.000
C306 C308 C309 C310 C317	CAP,DISC,100V,.15UF	CY20A154M	C-L	1510-11-1154	5.000
C311	CAP,DISC,100V,.01UF TAPE AND REEL	68U103M	MDC	1510-10-2103	1.000
C314	CAP,DISC,1KV,270PF	60U271M	MDC	1510-10-1271	1.000
C319 C320 C322	CAP,MICA,100V,1000PF	ADM-15CA102J	ARC	1510-50-6102	3.000
C321	CAP,TANT,25V,10UF	100DE106M20C2	ACI	1510-21-7100	1.000
CR301 CR302 CR303	DIODE,SIGNAL,GP AXIAL,V=75V,IO=10mA CT=4pF,SS#2	1N914	G-E	4807-01-0914	3.000
IC301	IF AMP STATIC SENSITIVE #2	MC1350P	MOT	7000-13-5000	1.000
IC303	DUAL OP AMP STATIC SENSITIVE #2	TL082CP	T-I	7000-00-8200	1.000
IC304	QUAD NAND STATIC SENSITIVE	MC14011BCP	MOT	8001-40-1112	1.000
IC304	PHASE DETECTOR STATIC SENSITIVE	MC4044P	MOT	8000-40-4400	1.000
L301 L303	CHOKE,COATED,6.8UH 10%,D=0.120IN L=0.300IN,I=175MA	08N6R8	JEF	1810-03-0689	2.000
L304 L305	TOROID,10T,1-1/4L	LA009-010-1	W-I	1810-05-0004	2.000
Q301	NPN,TO-72,UHF AMP VCBO=15V,IC=25mA P=200mW,hFE=25,SS#2	2N5053	APX	4901-05-0530	1.000
Q302	PNP,TO-92,GP AMP/SW F=300,V=40,Icex=50nA P=625mW,hFE=100,SS#2	2N3906	T-I	4901-03-9060	1.000
R301	RES,C,1/4W,5%,2.7K	CF1/4-2.7K	ASE	4700-15-2701	1.000
R302 R309 R323 R324 R329 R331	RES,C,1/4W,5%,20K	CF1/4-20K	ASE	4700-15-2002	6.000
R303 R315 R332	RES,C,1/4W,5%,1K	CF1/4-1K	ASE	4700-15-1001	3.000
R304 R311 R319 R325	RES,C,1/4W,5%,10	CF1/4-10	ASE	4700-15-1009	4.000
R305	RES,C,1/4W,5%,5.6K	CF1/4-5.6K	ASE	4700-15-5601	1.000

REFERENCE DESIGNATORS	PART DESCRIPTION	ORIG-MFGR-PART-NO	MFGR	WAVETEK NO.	QTY
R306	RES,C,1/4W,5%,100	CF1/4-100	ASE	4700-15-1000	1.000
R307	RES,C,1/4W,5%,200	CF1/4-200	ASE	4700-15-2000	1.000
R308	RES,C,1/4W,5%,470	CF1/4-470	ASE	4700-15-4700	1.000
R310	RES,C,1/4W,5%,180	CF1/4-180	ASE	4700-15-1800	1.000
R312 R314	RES,MF,1/8W,1%,1K	RN55D-1K	MILSP	4701-03-1001	2.000
R313	RES,C,1/4W,5%,2.7	CF1/4-2.7	ASE	4700-15-2708	1.000
R316	RES,C,1/4W,5%,2K	CF1/4-2K	ASE	4700-15-2001	1.000
R317	TRM,CM,L,2K,20%,PC 1T,PN,CW,.375H,.15W .350L,SA	91AR2K	BEK	4610-00-7202	1.000
R318	RES,C,1/4W,5%,27K	CF1/4-27K	ASE	4700-15-2702	1.000
R321	RES,MF,1/8W,1%,4.99K	RN55D-4.99K	MILSP	4701-03-4991	1.000
R322	RES,C,1/4W,5%,100K	CF1/4-100K	ASE	4700-15-1003	1.000
R326	RES,MF,1/8W,1%,11.3K	RN55D-11.3K	MILSP	4701-03-1132	1.000
R327	RES,MF,1/8W,1%,1.50K	RN55D-1.50K	MILSP	4701-03-1501	1.000
R328 R330	RES,C,1/8W,5%,100K	CF1/8-100K	ASE	4700-05-1003	2.000

REFERENCE DESIGNATORS	PART DESCRIPTION	ORIG-MFGR-PART-NO	MFGR	WAVETEK NO.	QTY
1	PSK DEMODULATOR, M119-155	M119-155	W-I	1114-00-0353	1.000
W06	CABLE ASSY, 3 1/2 IN	WX1865-W4	W-I	1217-70-0061	1.000

WAVETEK PARTS LIST	OPT DP-155, DUAL PILOT, 1865(O)	1019-00-0192 PAGE: 1	REV

REFERENCE DESIGNATORS	PART DESCRIPTION	ORIG-MFGR-PART-NO	MFGR	WAVETEK NO.	QTY
10	COVER PER B/P	A001-910	W-I	1410-00-2380	1.000
11	COVER PER B/P	A001-911	W-I	1410-00-2390	1.000
16	SCW,SBH,2-56X3/16	4001NP	F-S	2810-17-2103	15.000
17	LOWASHER,INT 2	1330NP	F-S	2810-24-2000	15.000
20	IC SKT,PC,14 PIN MC000-073	C931402	T-I	2112-00-0011	1.000
21	PCB,IC MTG, A001-007-14 FROM:3210-05-0048	A001-007-14	W-I	1410-00-2660	1.000
23	FISHPAPER;PHASE LOCK PER B/P	A001-963	W-I	1410-00-9440	1.000
24	FISHPAPER; BANDPASS PER B/P	A001-964	W-I	1410-00-9450	1.000
25	OSC FISH PAPER B/P	A001-965	W-I	1410-00-9460	1.000
C13	CAP,TANT,25V,10UF	100DE106M20C2	ACI	1510-21-7100	1.000
CR01 CR02	DIODE,RECT,GP DO-15,V=400V,IO=1.0A SUR I=30A,SS#2	1N4004	P-C	4806-01-4004	2.000
IC01	QUAD NAND STATIC SENSITIVE	MC14011BCP	MOT	8001-40-1112	1.000
L01	TOROID,10T,1-1/2L	LA009-010-2	W-I	1810-05-0005	1.000
L02 L03	TOROID,10T,1-1/4L	LA009-010-1	W-I	1810-05-0004	2.000
L04	CHOKE,COATED,47UH 10%,D=0.120IN L=0.300,I=110MA	08N470	JEF	1810-03-0470	1.000
MX01	MIXER,DBL.BALANCED	CM-1	VARIL	3010-54-0001	1.000
R01	RES,C,1/4W,5%,9.1K	CF1/4-9.1K	ASE	4700-15-9101	1.000
R02	RES,C,1/4W,5%,5.1K	CF1/4-5.1K	ASE	4700-15-5101	1.000
R03	RES,C,1/4W,5%,10K	CF1/4-10K	ASE	4700-15-1002	1.000
ZA01	AMP ASSY, M119-155	M119-155-AMP BD	W-I	1218-00-0431	1.000
ZA02	OSC ASSY, M119-155	M119-155-OSC BD	W-I	1218-00-0441	1.000
ZA03	PHASE LOCK BD, M119	M119-PH LK BD	W-I	1218-00-0450	1.000
ZA04	SWITCH PC ASSY M119-155	M119-155-SW BD	W-I	1218-00-1340	1.000

REFERENCE DESIGNATORS	PART DESCRIPTION	ORIG-MFGR-PART-NO	MFGR	WAVETEK NO.	QTY
C101 C110 C113	CAP,DISC,1KV,470PF TAPE AND REEL	60U471M	MDC	1510-10-1471	3.000
C103	CAP,DISC,100V,.01UF TAPE AND REEL	68U103M	MDC	1510-10-2103	1.000
C104 C112	CAP,MON,50V,1UF	3420-050-E105M	AER	1510-11-3105	2.000
C105 C107	CAP,MICA,300V,6PF	DM-5CC060D	ARC	1510-50-1609	2.000
C106 C108	CAP,COMP,500V,.36PF	MC 36PF	Q-C	1510-40-1368	2.000
C109	CAP,MICA,300V,5PF	DM-5CC050D	ARC	1510-50-1509	1.000
C111	CAP,DISC,1KV,.001UF TAPE AND REEL	5GAD10	SPR	1510-10-1102	1.000
L101 L107	TOROID,10T,1-1/4L	LA009-010-1	W-I	1810-05-0004	2.000
L102	COIL,AIR,4T,.200 ID	4T,PER SPEC.	ATR	1815-00-0003	1.000
L103	COIL,AIR,3T,.200 ID	3T,PER SPEC.	ATR	1815-00-0002	1.000
L104	COL,AIR,5 1/2T,200ID	6T,PER SPEC.	ATR	1815-00-0004	1.000
L105	COIL,7T,.2ID,PER B/P	1815-00-0029	W-I	1815-00-0029	1.000
L106	COIL,AIR,2T,0.200 ID	2T,PER SPEC.	ATR	1815-00-0001	1.000
Q101 Q102	NPN,TO-72,UHF AMP VCBO=15V,IC=25mA P=200mW,hFE=25,5S#2	2N5053	APX	4901-05-0530	2.000
R102	RES,C,1/8W,5%,20K	CF1/8-20K	ASE	4700-05-2002	1.000
R103 R107	RES,C,1/8W,5%,10	CF1/8-10	ASE	4700-05-1009	2.000
R104 R108	RES,C,1/4W,5%,1K	CF1/4-1K	ASE	4700-15-1001	2.000
R105	RES,C,1/8W,5%,6.8K	CF1/8-6.8K	ASE	4700-05-6801	1.000
R106	RES,C,1/8W,5%,15K	CF 1/8-15K	ASE	4700-05-1502	1.000

REFERENCE DESIGNATORS	PART DESCRIPTION	ORIG-MFGR-PART-NO	MFGR	WAVETEK NO.	QTY
C201	CAP,MON,50V,1UF	3420-050-E105M	AER	1510-11-3105	1.000
C202 C203	CAP,DISC,1KV,.001UF TAPE AND REEL	5GAD10	SPR	1510-10-1102	2.000
C204	CAP,DISC,100V,.15UF	CY20A154M	C-L	1510-11-1154	1.000
C205	CAP,MICA,500V,.001UF	DM15-102J	ARC	1510-50-0102	1.000
C206 C209	CAP,MICA,300V,4PF	DM5-040D	ARC	1510-50-1409	2.000
C207	CAP,MICA,300V,12PF	DM-5CC120J	ARC	1510-50-1120	1.000
C208	CAP,MICA,300V,3PF	DM5-030D	ARC	1510-50-1309	1.000
C210	CAP,TANT,25V,1UF	100DE105K25A2	ACI	1510-21-7010	1.000
CR201	DIODE,VAR CAP,UHF AXIAL,V=28,IO=20mA SS#2	BB205B	APX	4803-02-0004	1.000
L201 L202	TOROID,10T,1-1/4L	LA009-010-1	W-I	1810-05-0004	2.000
L203	COIL,4-1/2T,#22 .200 ID,1/4 LEADS	1B15-00-0017	W-I	1815-00-0017	1.000
L204	COIL,AIR,2T,0.200 ID	2T,PER SPEC.	ATR	1815-00-0001	1.000
Q201	NPN,TO-72,UHF AMP VCBO=15V,IC=25mA P=200mW,hFE=25,SS#2	2N5053	APX	4901-05-0530	1.000
R201	RES,C,1/8W,5%,9.1K	CF1/8-9.1K	ASE	4700-05-9101	1.000
R202	RES,C, 1/8W,5%, 5.1K	CF 1/8 -5.1 K	ASE	4700-05-5101	1.000
R203	RES,1/8W,5,330	CF1/8-330	ASE	4700-05-3300	1.000
R204	RES,C,1/8W,5%,47	CF1/8-47	ASE	4700-05-4709	1.000
R205	RES,C,1/8W,5%,20K	CF1/8-20K	ASE	4700-05-2002	1.000
R206 R208	RES,C,1/8W 5% 470	CF1/8-470	ASE	4700-05-4700	2.000
R207	RES,C,1/8W,5%,27	CF1/8-27	ASE	4700-05-2709	1.000
R209	RES,C,1/8W,5%,1.8K	CF1/8-1.8K	ASE	4700-05-1801	1.000

REFERENCE DESIGNATORS	PART DESCRIPTION	ORIG-MFGR-PART-NO	MFGR	WAVETEK NO.	QTY
C301 C302	CAP,MICA,100V,250PF	ADM-10CA251J	ARC	1510-50-5251	2.000
C303	CAP,DISC,1KV,.001UF TAPE AND REEL	5GAD10	SPR	1510-10-1102	1.000
C304 C305 C307 C312 C313 C315 C316 C318	CAP,MON,50V,1UF	3420-050-E105M	AER	1510-11-3105	8.000
C306 C308 C309 C310 C317	CAP,DISC,100V,.15UF	CY20A154M	C-L	1510-11-1154	5.000
C311	CAP,DISC,100V,.01UF TAPE AND REEL	68U103M	MDC	1510-10-2103	1.000
C314	CAP,DISC,1KV,270PF	60U271M	MDC	1510-10-1271	1.000
C319 C320	CAP,MICA,500V,.001UF	DM15-102J	ARC	1510-50-0102	2.000
C321	CAP,TANT,25V,10UF	100DE106M20C2	ACI	1510-21-7100	1.000
CR301 CR302 CR303	DIODE,SIGNAL,GP AXIAL,V=75V,IO=10mA CT=4pF,5%2	1N914	G-E	4807-01-0914	3.000
IC301	IF AMP STATIC SENSITIVE #2	MC1350P	MOT	7000-13-5000	1.000
IC302	PHASE DETECTOR STATIC SENSITIVE	MC4044P	MOT	8000-40-4400	1.000
IC303	DUAL OP AMP STATIC SENSITIVE #2	TL082CP	T-I	7000-00-8200	1.000
IC304	QUAD NAND STATIC SENSITIVE	MC14011BCP	MOT	8001-40-1112	1.000
L301 L303	CHOKE,COATED,6.8UH 10%,D=0.120IN L=0.300IN,I=175MA	08N6R8	JEF	1810-03-0689	2.000
L302	CHOKE,COATED,3.9UH 10%,D=0.120IN L=0.300IN,I=250MA	08N3R9	JEF	1810-03-0399	1.000
L304 L305	TOROID,10T,1-1/4L	LA009-010-1	W-I	1810-05-0004	2.000
Q301	NPN,TO-72,UHF AMP VCBO=15V,IC=25mA P=200mW,hFE=25,5S#2	2N5053	APX	4901-05-0530	1.000
Q302	PNP,TO-92,GP AMP/SW F=300,V=40,Icex=50nA P=625mW,hFE=100,SS#2	2N3906	T-I	4901-03-9060	1.000
R301	RES,C,1/4W,5%,2.7K	CF1/4-2.7K	ASE	4700-15-2701	1.000
R302 R309 R323 R324 R329 R331	RES,C,1/4W,5%,20K	CF1/4-20K	ASE	4700-15-2002	6.000
R303 R315 R332	RES,C,1/4W,5%,1K	CF1/4-1K	ASE	4700-15-1001	3.000
R304 R311 R319 R325	RES,C,1/4W,5%,10	CF1/4-10	ASE	4700-15-1009	4.000
R305	RES,C,1/4W,5%,5.6K	CF1/4-5.6K	ASE	4700-15-5601	1.000

REFERENCE DESIGNATORS	PART DESCRIPTION	ORIG-MFGR-PART-NO	MFGR	WAVETEK NO.	QTY
R306	RES,C,1/4W,5%,100	CF1/4-100	ASE	4700-15-1000	1.000
R307	RES,C,1/4W,5%,200	CF1/4-200	ASE	4700-15-2000	1.000
R308	RES,C,1/4W,5%,470	CF1/4-470	ASE	4700-15-4700	1.000
R310	RES,C,1/4W,5%,180	CF1/4-180	ASE	4700-15-1800	1.000
R312 R314	RES,MF,1/8W,1%,1K	RN55D-1K	MILSP	4701-03-1001	2.000
R313	RES,C,1/4W,5%,2.7	CF1/4-2.7	ASE	4700-15-2708	1.000
R316	RES,C,1/4W,5%,2K	CF1/4-2K	ASE	4700-15-2001	1.000
R317	TRM,CM,L,2K,20%,PC 1T,PN,CW,.375H,.15W .350L,SA	91AR2K	BEK	4610-00-7202	1.000
R318	RES,C,1/4W,5%,27K	CF1/4-27K	ASE	4700-15-2702	1.000
R321	RES,MF,1/8W,1%,4.99K	RN55D-4.99K	MILSP	4701-03-4991	1.000
R322	RES,C,1/4W,5%,100K	CF1/4-100K	ASE	4700-15-1003	1.000
R326	RES,MF,1/8W,1%,11.3K	RN55D-11.3K	MILSP	4701-03-1132	1.000
R327	RES,MF,1/8W,1%,1.50K	RN55D-1.50K	MILSP	4701-03-1501	1.000
R328 R330	RES,C,1/8W,5%,100K	CF1/8-100K	ASE	4700-05-1003	2.000

REFERENCE DESIGNATORS	PART DESCRIPTION	ORIG-MFGR-PART-NO	MFGR	WAVETEK NO.	QTY
C401 C402 C403 C404 C405 C406	CAP,CHIP,.1 UF TAPE AND REEL	51C1209-B104Z	CFI	1510-00-3104	6.000
CR401 CR402 CR403 CR404	DIODE,SWITCHING,VHF DO-34,V=35,IF=100mA CT=0.8pF,SS#2	BA482	APX	4812-02-0004	4.000
R401 R405	RES,C,1/8W,5%,1K RC101-210	CF1/8-1K	ASE	4700-05-1001	2.000
R402 R403 R404	RES,C,1/8W,5%,2K	CF1/8-2K	ASE	4700-05-2001	3.000

WAVETEK PARTS LIST	SWITCH PC ASSY M119-155	1218-00-1340 PAGE: 1	C REV

REFERENCE DESIGNATORS	PART DESCRIPTION	ORIG-MFGR-PART-NO	MFGR	WAVETEK NO.	QTY
2	CASE/CHAS INTFC BD	1865-3-CASE/CHAS BD	W-I	1110-00-9003	1.000
3	OPT/INTFC BD	1855-INTFC BD	W-I	1110-00-9002	1.000
4	PC ASSY, CD RDR OPT	CRW-1-PC	W-I	1110-00-9001	1.000
6	PLATE,MTG,PER B/P	1414-00-0002	W-I	1414-00-0002	1.000
7	GASKET,MTG PLATE, PER B/P	1414-00-0003	W-I	1414-00-0003	1.000
8	NUT PLATE ASSY	1111-00-9001	W-I	1111-00-9001	2.000
9	DECAL,CARD READEROPT	DMA-500	W-I	2410-04-0459	2.000
10	CABLE CLAMP,FLAT,3/8	CFCC-4	RICH	2810-00-0019	1.000
11	CAP,SEALING,W/CHAIN	208652-1	AMP	2113-33-0004	1.000
12	CARD GUIDE,4-1/2 IN	11633-2	SCBE	2112-16-0008	2.000
13	FISH PAPER,PER B/P	1414-00-0005	W-I	1414-00-0005	1.000
14	FISHPAPER PER B/P	1410-30-1190	W-I	1410-30-1190	1.000
15	SCW,SBH,2-56X1/2	4006NP	F-S	2810-17-2108	8.000
16	SCW,SBH,4-40X5/16	4023NP	F-S	2810-17-4105	1.000
17	CABLE CLAMP,1/8	3302	HEY	2810-00-0011	1.000
18	LOWASHER,INT 2	1330NP	F-S	2810-24-2000	8.000

REFERENCE DESIGNATORS	PART DESCRIPTION	ORIG-MFGR-PART-NO	MFGR	WAVETEK NO.	QTY
2	IC SKT,PC,14 PIN MC000-073	C931402	T-I	2112-00-0011	5.000
3	IC SKT,16 PIN MC000-074	DIL8-16P-108	BURND	2112-00-0012	8.000
4	IC SKT,PC,24 PIN MC000-126	C932402	T-I	2112-00-0013	2.000
C01	CAP,DISC,100V,.01UF TAPE AND REEL	68U103M	MDC	1510-10-2103	1.000
C02 C04 C05 C06 C07 C08 C09 C10	CAP,DISC,100V,.15UF	CY20A154M	C-L	1510-11-1154	8.000
C03	CAP,ELEC,50V,10UF	TE1304	SPR	1510-20-5100	1.000
J10	HEADER,R.A.,20-PIN	FCC-251-20	AWC	2112-08-0025	1.000
R01	RES,C,1/4W,5%,100K	CF1/4-100K	ASE	4700-15-1003	1.000
R2	RES,C,1/4W,5%,10	CF1/4-10	ASE	4700-15-1009	1.000
R03	RES,C,1/4W,5%,10K	CF1/4-10K	ASE	4700-15-1002	1.000
RN01 RN02 RN03	RES NTWK,SIP,9-470K	109-474J	EPITK	4770-00-0011	3.000
U01	HEX INVERTER STATIC SENSITIVE	CD4049UBE	RCA	8000-40-4912	1.000
U02	QUAD AND GATE STATIC SENSITIVE	MC14081BCP	MOT	8001-40-8110	1.000
U03 U04 U06	DUAL D, FLIP-FLOP STATIC SENSITIVE	MC14013BCP	MOT	8001-40-1310	3.000
U05	COUNTER,14 STAGE BIN STATIC SENSITIVE	CD4020BE	RCA	8000-40-2002	1.000
U07	QUAD NAND STATIC SENSITIVE	MC14011BCP	MOT	8001-40-1112	1.000
U08	N-BIT,1 OF 8 DECODER STATIC SENSITIVE	CDP1853CE	RCA	8000-18-5310	1.000
U09	QUAD LATCH STATIC SENSITIVE	MC14042BCP	MOT	8001-40-4210	1.000
U10 U11 U12 U13	QUAD D, REGISTER STATIC SENSITIVE	MC14076BAP	MOT	8001-40-7610	4.000
U14	PROM, MOD1,CD RDR OP REF:8000-25-1610 STATIC SENSITIVE	8410-00-0016	W-I	8410-00-0016	1.000

REFERENCE DESIGNATORS	PART DESCRIPTION	ORIG-MFGR-PART-NO	MFGR	WAVETEK NO.	QTY
1	PC BD,ZZ1010A	ZZ1010A	W-I	1710-00-3600	1.000
5	SPACER,THD,4-40X3/8 HD101-406	108303NP	F-S	2810-02-4106	2.000
6	SCW,SBH,4-40X1/4	4022NP	F-S	2810-17-4104	2.000
7	WASH,LOCK,SPLIT,4	1355	F-S	2810-28-0038	2.000
8	TERMINAL,HT104-003	1559-2	KEY	2112-19-0001	2.000
J26	HDR,STRT,DBL 20-PIN	65611-420	BERG	2112-07-0068	1.000

WAVETEK PARTS LIST	OPT/INTFC BD	1110-00-9002 PAGE: 1	B REV

REFERENCE DESIGNATORS	PART DESCRIPTION	ORIG-MFGR-PART-NO	MFGR	WAVETEK NO.	QTY
6	CABLE CLAMP,FLAT,1	CFCC-8	RICH	2810-00-0012	2.000
J27	CONN ASSY	1216-00-9003	W-I	1216-00-9003	1.000

WAVETEK PARTS LIST	CASE/CHAS INTFC BD	1110-00-9003 PAGE: 1	C REV

REFERENCE DESIGNATORS	PART DESCRIPTION	ORIG-MFGR-PART-NO	MFGR	WAVETEK NO.	QTY
1	PLATE,NUT,PER B/P	1414-00-0007	W-I	1414-00-0007	1.000
2	NUT,PRESS,2-56	S-256-2CI	PEM	2810-09-0011	2.000

WAVETEK PARTS LIST	NUT PLATE ASSY	1111-00-9001 PAGE: 1	REV

REFERENCE DESIGNATORS	PART DESCRIPTION	ORIG-MFGR-PART-NO	MFGR	WAVETEK NO.	QTY
2	CONN,PC,20-PIN	FCC-140-20	AWC	2112-35-0002	1.000
3	RAINBOW CABLE,20COND PVC, 28 GA,105C/300V 7/36 STRAND	3583-20	AWC	6011-60-0003	24.000
4	TERM,MINI-PV,STRIP	47437	BER	2113-20-0002	19.000
5	PLUG,POLARIZING MC000-117	65307-001	BER	2113-23-0001	1.000
P26	CONN,MINI-LATCH,2X10	65043-027	BER	2113-28-0005	1.000

WAVETEK PARTS LIST	CS/CHAS INFC HARNESS	1219-40-0085 PAGE: 1	REV

REFERENCE DESIGNATORS	PART DESCRIPTION	ORIG-MFGR-PART-NO	MFGR	WAVETEK NO.	QTY
2	CONN,PC,20-PIN	FCC-140-20	AWC	2112-35-0002	1.000
3	RAINBOW CABLE,20COND PVC, 28 GA,105C/300V 7/36 STRAND	3583-20	AWC	6011-60-0003	20.000
4	TERM,RING,NO.4,INSUL	4972	HHS	2112-03-0021	1.000
9	TERM,MINI-PVMC000-092	47217	BER	2113-20-0001	1.000
17	WIRE,24GA,BK FROM:6012-12-4999	6012-12-4000	W-I	6012-12-4000	12.000
18	WIRE,24GA,RD FROM:6012-12-4999	6012-12-4222	W-I	6012-12-4222	7.000
J18	HSG,MINI-LATCH,2-PIN	65039-035	BER	2113-10-0015	1.000
P10	SOCKET,RIBBON CABLE, 20 CKT.	FCC-210-20	AWC	2112-36-0001	1.000

WAVETEK PARTS LIST	CHA/OPT BD,INFC HARN	1219-40-0086 PAGE: 1	A REV

REFERENCE DESIGNATORS	PART DESCRIPTION	ORIG-MFGR-PART-NO	MFGR	WAVETEK NO.	QTY
1	CHASSIS, CD RDR	CD RDR CHASS	W-I	1216-00-9001	1.000
2	ENCLOSURE,PER B/P FROM:3210-12-0007	1414-30-0001	W-I	1414-30-0001	1.000
3	CAN,CARD STORAGE PER B/P FROM:3210-08-0012	1414-30-0000	W-I	1414-30-0000	1.000
4	DUST COVER,PER B/P	1414-60-0000	W-I	1414-60-0000	1.000
5	FOOT,RUBBER,6-32STUD	MB-50	PHILP	2810-08-0011	4.000
6	GROMMET,CAN,8.31 REF:3210-06-0030	2810-10-0032	W-I	2810-10-0032	1.000
7	SCW,SBH,6-32X5/16	4033NP	F-S	2810-17-6105	4.000
8	MAG CARD	3010-15-0001	W-I	3010-15-0001	10.000
9	CARD,HEAD CLEANER	3010-15-0002	W-I	3010-15-0002	1.000
10	MAG CARD HOLDER	3010-10-0007	W-I	3010-10-0007	10.000
11	CLEANING CARD HOLDER	3010-10-0008	W-I	3010-10-0008	1.000
12	DECAL,SER.NO.	DMB-11	W-I	2410-04-0001	1.000
13	FOAM PAD,PER B/P	1414-00-0010	W-I	1414-00-0010	1.000
14	FOAM LINER,PER B/P REF:1610-99-0004	1414-00-0009	W-I	1414-00-0009	1.000
15	FOAM LINER PER B/P REF:1610-99-0004	1414-00-0008	W-I	1414-00-0008	1.000

REFERENCE DESIGNATORS	PART DESCRIPTION	ORIG-MFGR-PART-NO	MFGR	WAVETEK NO.	QTY
1	PC ASSY, CD RDR	CRW-I-PC	W-I	1218-00-9001	1.000
2	HARNESS, CRW-1	WYCRW-1	W-I	1219-00-9001	1.000
3	MAG CARD RDR,PER BP	3010-56-0001	W-I	3010-56-0001	1.000
4	MTG PLATE ASSY	1216-00-9002	W-I	1216-00-9002	1.000
5	BALANCE WEIGHTPER B/P	1414-00-0006	W-I	1414-00-0006	1.000
6	SPACER,HEX,6-32X1	9508	F-S	2810-02-6116	4.000
7	SPACER,HEX 6-32X5/8	108325	F-S	2810-02-6110	4.000
8	GROMMET,PLASTIC,1.19 REF;3210-06-0031	2810-10-0030	W-I	2810-10-0030	1.000
9	GROMMET,PLASTIC,.44 REF;3210-06-0031	2810-10-0031	W-I	2810-10-0031	1.000
10	CABLE CLAMP,1/8	3302	HEY	2810-00-0011	1.000
11	SCW,SBH,6-32X3/8	4034NP	F-S	2810-17-6106	9.000
12	SCW,SBH,6-32X1/4	6-32X1/4,UC,BH,NP	S-S	2810-17-6104	4.000
13	SCW,SBH,6-32X1/2	4036NP	F-S	2810-17-6108	1.000
14	LWASHER,SPLIT,6 HW107-600	1358NP	F-S	2810-28-0019	14.000
15	CABLE TIE,4	PLTIM-MP	PAND	2810-00-0010	2.000

REFERENCE DESIGNATORS	PART DESCRIPTION	ORIG-MFGR-PART-NO	MFGR	WAVETEK NO.	QTY
1	PLATE,MTG,PER B/P	1414-60-0001	W-I	1414-60-0001	1.000
2	STUD,SELF-CLINCH, 6-32X1/2	FH-632-8CI	PEM	2810-47-0001	8.000
3	NUT,PRESS,6-32	S-632-3CI	PEM	2810-09-0010	8.000

WAVETEK PARTS LIST	MTG PLATE ASSY	1216-00-9002 PAGE: 1	REV

REFERENCE DESIGNATORS	PART DESCRIPTION	ORIG-MFGR-PART-NO	MFGR	WAVETEK NO.	QTY
1	RECPT,16 CKT,FLANGED	206036-1	AMP	2113-11-0003	1.000
2	PIN,MALE,WIRE-WRAP	66460-7	AMP	2113-12-0003	16.000
3	SEAL,AMP CONN,.875	206403-2	AMP	2113-33-0003	1.000
4	NUT,PRESS,2-56	S-256-2CI	PEM	2810-09-0011	4.000

WAVETEK PARTS LIST	CONN ASSY	1216-00-9003 PAGE: 1	REV

REFERENCE DESIGNATORS	PART DESCRIPTION	ORIG-MFGR-PART-NO	MFGR	WAVETEK NO.	QTY
2	IC SKT,8 PIN	DILB-8P-108	BURND	2112-00-0007	8.000
3	IC SKT,PC,14 PIN MC000-073	C931402	T-I	2112-00-0011	11.000
4	IC SKT,16 PIN MC000-074	DILB-16P-108	BURND	2112-00-0012	3.000
5	SCW,SBH,6-32X1/4	6-32X1/4,UC,BH,NP	S-S	2810-17-6104	4.000
6	INT,LOWASHER,6 HW101-600	1304ZP	F-S	2810-24-6000	4.000
7	NUT,6-32X1/4HN101-600	8005NP	F-S	2810-14-6100	4.000
8	WASH,NO.6,5/16O.D.	97311	F-S	2810-26-0015	2.000
9	WASH,INAULRING	43-77-2	THR	2810-28-0039	2.000
C01 C14	CAP,MICA,500V,200PF	DM15-201J	S-F	1510-50-0201	2.000
C02	CAP,MICA,500V,100PF	CD15-FD101J03	C-D	1510-50-0101	1.000
C03 C04 C06 C15	CAP,TANT,25V,1UF	100DE105K25A2	ACI	1510-21-7010	4.000
C05 C09 C10 C17	CAP,MICA,500V,.001UF	DM15-102J	ARC	1510-50-0102	4.000
C07	CAP,MICA,500V,510PF	DM-15-511J	ARC	1510-50-0511	1.000
C08	CAP,MICA,500V,2000PF	DM19-202J	ARC	1510-50-0202	1.000
C11 C19	CAP,TANT,25V,10UF	100DE106M20C2	ACI	1510-21-7100	2.000
C12	CAP,TANT,35V,47UF	T322F476M035AS	UNCAR	1510-22-4470	1.000
C13	CAP,MICA,500V,680PF	DM15-681J	ARC	1510-50-8681	1.000
C16	CAP,MICA,300V,10PF	DM-5CC100J	ARC	1510-50-1100	1.000
C18	CAP,DISC,100V,.15UF	CY20A154M	C-L	1510-11-1154	1.000
CR01 CR02	DIODE,SIGNAL,GP AXIAL,V=75V,IO=10mA CT=4pF,SS#2	1N914	G-E	4807-01-0914	2.000
J01	HEADER,RA,6-PIN REF:2112-08-0005	65521-406	BER	2112-08-0024	1.000
L01	CHOKE,MOLDED,510UH	2500-15	DEL	1810-01-5100	1.000
Q01 Q02	PROT PWR DARLINGTON STATIC SENSITIVE #2	LM395T	NAT	4902-00-3950	2.000
Q03 Q04	FET-N,TO-202,POWER V=40,Id=1.4,P=15WSS#2	VN46AF	SCX	4902-00-0460	2.000
R01 R02 R03 R07 R13 R27 R28 R29 R30 R31 R37 R39 R40 R41	RES,C,1/4W,5%,10K	CF1/4-10K	ASE	4700-15-1002	14.000
R04	RES,C,1/4W,5%,15	CF1/4-15	ASE	4700-15-1509	1.000
R05	RES,C,1/4W,5%,100K	CF1/4-100K	ASE	4700-15-1003	1.000

REFERENCE DESIGNATORS	PART DESCRIPTION	ORIG-MFGR-PART-NO	MFGR	WAVETEK NO.	QTY
R06	RES,MF,1/8W,1%,182K	RN55D-182K	MILSP	4701-03-1823	1.000
R08 R36	RES,C,1/4W,5%,1M	CF1/4-1M	ASE	4700-15-1004	2.000
R09	RES,C,1/4W,5%,560K	CF1/4-560K	ASE	4700-15-5603	1.000
R10 R11	RES, MF,1/8W,1%,475	RN55D-475	MILSP	4701-03-4750	2.000
R12	RES,MF,1/8W,1%,3.92K	RN55D-3.92K	MILSP	4701-03-3921	1.000
R14 R15 R16 R22 R24 R35	RES,C,1/4W,5%,4.7K	CF1/4-4.7K	ASE	4700-15-4701	6.000
R17 R18	RES,MF,1/8W,1%,10K	RN55D-10K	MILSP	4701-03-1002	2.000
R20 R21	RES,C,1/4W,5%,2K	CF1/4-2K	ASE	4700-15-2001	2.000
R23 R25 R38	RES,C,1/4W,5%,1K	CF1/4-1K	ASE	4700-15-1001	3.000
R26	RES,C,1/4W,5%,470K	CF1/4-470K	ASE	4700-15-4703	1.000
R32	RES,C,1/4W,5% 1.3K	CF1/4-1.3K	ASE	4700-15-1301	1.000
R33 R34	RES,C,1/4W,5%,39K	CF1/4-39K	ASE	4700-15-3902	2.000
U01 U02	QUAD ANALOG SWITCH STATIC SENSITIVE	MC14066BCP	MOT	7001-40-6612	2.000
U03 U04	DUAL OP AMP STATIC SENSITIVE #2	TL082CP	T-I	7000-00-8200	2.000
U05	IC,IL004-001 STATIC SENSITIVE #2	LM339N	NAT	7000-03-3900	1.000
U06 U08 U14 U15 U16	QUAD NAND STATIC SENSITIVE	MC14011BCP	MOT	8001-40-1112	5.000
U07	DUAL MONOSTABLE F-F STATIC SENSITIVE	MC14538BCP	MOT	8001-45-3812	1.000
U09 U20	HEX INVERTER STATIC SENSITIVE	CD4049UBE	RCA	8000-40-4912	2.000
U10 U11 U12 U13 U17 U22	DUAL 2-INP NAND DRVR STATIC SENSITIVE	CD40107BE	RCA	8004-01-0712	6.000
U18	DUAL D, FLIP-FLOP STATIC SENSITIVE	MC14013BCP	MOT	8001-40-1310	1.000
U19	DUAL AND-OR-INVERT STATIC SENSITIVE	CD4085BE	RCA	8000-40-8512	1.000
U21	TRIPLE 3-INP NAND STATIC SENSITIVE	CD4023BE	RCA	8000-40-2312	1.000

REFERENCE DESIGNATORS	PART DESCRIPTION	ORIG-MFGR-PART-NO	MFGR	WAVETEK NO.	QTY
1	BRKT,CABLE,PER B/P	1414-00-0004	W-I	1414-00-0004	1.000
2	STRAIN RELIEF,.625	1220	HEY	2810-37-0008	1.000
3	CABLE, 15 COND,RETR	6011-70-0003	W-I	6011-70-0003	1.000
4	TERM,MINI-PVMC000-092	47217	BER	2113-20-0001	15.000
5	PLUG,POLARIZING MC000-117	65307-001	BER	2113-23-0001	1.000
6	SOCKET FOR AMP PLUG	66105-1	AMP	2113-12-0002	15.000
7	STRAIN RELIEF FROM:2113-33-0001	2113-33-0002	W-I	2113-33-0002	1.000
8	CABLE GRIP FROM:2113-34-0001	2113-34-0002	W-I	2113-34-0002	1.000
P03	CONN,MINI-LATCH,2X8	65043-029	BER	2113-28-0004	1.000
P27	PLUG,16 CKT	206037-1	AMP	2113-11-0002	1.000

WAVETEK PARTS LIST	HARNESS, CRW-1	1219-00-9001 PAGE: 1	REV

REFERENCE DESIGNATORS	PART DESCRIPTION	ORIG-MFGR-PART-NO	MFGR	WAVETEK NO.	QTY
1	PCB,MEM EXP/LITHIUM BATT PCB	1714-00-9019	W-I	1714-00-9019	1.000
2	IC SKT,PC,14 PIN MC000-073	C931402	T-I	2112-00-0011	6.000
3	IC SKT,16 PIN MC000-074	DILB-16P-108	BURND	2112-00-0012	3.000
4	IC SKT,PC,24 PIN MC000-126	C932402	T-I	2112-00-0013	8.000
5	IC, SKT,28-PIN	C842802	T-I	2112-00-0023	2.000
BT01	BATTERY	CR-2N-T	SANYO	4010-00-0023	1.000
C01 C02 C03 C04 C05 C06 C07 C08 C09 C10 C11 C12 C13 C14 C15 C16 C17 C18 C19 C22 C24	CAP,DISC,100V,.15UF	CY20A154M	C-L	1510-11-1154	21.000
C20	CAP,TANT,25V,10UF	100DE106M20C2	ACI	1510-21-7100	1.000
C21 C26	CAP,MON,50V,1UF	3420-050-E105M	AER	1510-11-3105	2.000
C23	CAP,TANT,35V,47UF	T322F476M035AS	UNCAR	1510-22-4470	1.000
C25	CAP,DISC,1KV,.001UF TAPE AND REEL	5GAD10	SPR	1510-10-1102	1.000
CR01 CR02 CR03 CR04 CR05 CR06 CR07	DIODE,SIGNAL,GP AXIAL,V=75V,IO=10mA CT=4pF,SS#2	1N914	G-E	4807-01-0914	7.000
IC01	QUAD NAND STATIC SENSITIVE	MC14011BCP	MOT	8001-40-1112	1.000
IC02	QUAD TRUE CMPLT BFFR STATIC SENSITIVE	HEF4041BP	SIG	8000-40-4110	1.000
IC03	PROM,AVERAGER STAT2 REF:8000-25-1610 $72C5 REV 0	8410-00-0024	W-I	8410-00-0024	1.000
IC04	PROM, NORMALIZER REF:8000-25-1610 $490F REV 0 STAT 2	8410-00-0025	W-I	8410-00-0025	1.000
IC06	PROM, STACKER STAT 2 REF:8000-25-1610 $2B42 REV 0	8410-00-0023	W-I	8410-00-0023	1.000
IC07 IC12	DIVIDER,PGM,8-BYTE STATIC SENSITIVE	CDP1855CE	RCA	8000-18-5510	2.000
IC08 IC09	STATIC RAM,2048 X 8 STATIC SENSITIVE	TC5517APL	TSHBA	8000-55-1710	2.000
IC13 IC14	QUAD LATCH STATIC SENSITIVE	MC14042BCP	MOT	8001-40-4210	2.000
IC15	DECODER/DEMUXER STATIC SENSITIVE	MC74HC138N	MOT	8007-41-3811	1.000

REFERENCE DESIGNATORS	PART DESCRIPTION	ORIG-MFGR-PART-NO	MFGR	WAVETEK NO.	QTY
IC16	QUAD 2-INPUT OR GATE STATIC SENSITIVE	HEF4071B	SIG	8000-40-7100	1.000
IC17	TRPL 3 INPUT OR GATE STATIC SENSITIVE	HEF4075B	SIG	8000-40-7501	1.000
IC18	QUAD 2-INPUT NAND GATE, STATICSENSITIVE	HEF4011B	SIG	8000-40-1100	1.000
IC19	DUAL D-TYPE FL FLOP STATIC SENSITIVE	HEF4013B	SIG	8000-40-1301	1.000
J01	PV JUMPER	65474-002	BER	2112-10-0002	1.000
P01	HEADER,R.ANGLE,2-PIN REF:2112-08-0000	65524-402	BER	2112-08-0009	1.000
Q01	PNP,TO-92,GP AMP/SW F=300,V=40,Icex=50nA P=625mW,hFE=100,55$2	2N3906	T-I	4901-03-9060	1.000
R01 R02	RES NTWK,SIP,9-470K	109-474J	EPITK	4770-00-0011	2.000
R03 R04 R10 R14	RES,C,1/4W,5%,100K	CF1/4-100K	ASE	4700-15-1003	4.000
R05 R09 R16	RES,C,1/4W,5%,100	CF1/4-100	ASE	4700-15-1000	3.000
R06 R07 R08	RES,C,1/4W,5%,680K	CF1/4-680K	ASE	4700-15-6803	3.000
R11 R17	RES,C,1/4W,5%,1.8M	CF1/4-1.8M	ASE	4700-15-1804	2.000
R12	RES,C,1/4W,5%,5.1K	CF1/4-5.1K	ASE	4700-15-5101	1.000
R13 R15	RES,C,1/4W,5%,2K	CF1/4-2K	ASE	4700-15-2001	2.000

REFERENCE DESIGNATORS	PART DESCRIPTION	ORIG-MFGR-PART-NO	MFGR	WAVETEK NO.	QTY
1	CHASSIS BATTERY CHARGER-BC3	1410-60-1810	W-I	1410-60-1810	1.000
2	COVER(BATT.CHG. BC3)	1410-30-1870	W-I	1410-30-1870	1.000
5	STRAIN REL. BUSHING HB104-002	SR-5P-4 BLK	HEY	2810-37-0001	2.000
6	FUSEHOLDER,BODY WITH MTNG.NUT	031.1653	PCC	2410-05-0010	1.000
7	FUSE CARRIER, 3AG	031.1666	PCC	2410-05-0009	1.000
8	SHIELD,FUSE HOLDER HZ000-001	331	HHS	2810-12-0012	1.000
9	FEET,HH102-002	PP-40013	BUCK	2810-08-0003	4.000
10	RIVET.1/8X5/16	1162-0408	AVDEL	2810-30-0007	2.000
11	DECAL,WARNING 3000RP	RPD-41	W-I	2410-04-0299	1.000
12	DECAL,SER.NO.	DMB-11	W-I	2410-04-0001	1.000
13	SCW,SBH,6-32X3/8	4034NP	F-S	2810-17-6106	12.000
14	INT,LOWASHER,6 HW101-600	1304ZP	F-S	2810-24-6000	12.000
28	A C COVER PER B/P	1410-01-1530	W-I	1410-01-1530	1.000
29	NUT,6-32X1/4HN101-600	8005NP	F-S	2810-14-6100	1.000
30	GROUND LUG,#6,INT HG102-600	38-111	F-S	2112-03-0003	7.000
CR01	DIODE,RECT,GP AXIAL,V=200,IO=5.0A SUR I=225A,SS#2	1N5624	G-E	4806-01-5624	1.000
CR02	LED,RED,T-1-3/4 V=5.0V,IF=70mA Int=1.5mcd,SS#2	MV5056	G-I	4810-02-0001	1.000
F01	FUSE,S.B.,2AMP	MDX-2	BUS	2410-05-0001	1.000
HH1	HARNESS,BC-3-A	WYBC-3-A	W-I	1219-00-0324	1.000
HH2	HARNESS,BC-3-B	WYBC-3-B	W-I	1219-00-0325	1.000
HH3	HARNESS,BC-3-C	WYBC-3-C	W-I	1219-00-0326	1.000
HH4	HARNESS,BC-3-D	WYBC-3-D	W-I	1219-00-0327	1.000
P01	CORD SET,18/3SVT,6FT BK,MLD.CAP,UL-APPRV	6011-80-0001	ECMC	6011-80-0001	1.000
PS1	POWER SUPPLY,AC,15V	ES-15E	PWRMT	4010-00-0004	1.000
R01	RES,C,1W,5%,360	GB3615	A-B	4700-35-3600	1.000
S02	SWITCH,SLIDE,DPDT	4021.0512	MARQ	5105-00-0011	1.000

REFERENCE DESIGNATORS	PART DESCRIPTION	ORIG-MFGR-PART-NO	MFGR	WAVETEK NO.	QTY
15	HEATER CORD,2 COND, 18 GA.	19328	BEL	6014-51-8000	4.000
J2	CONN,FEM,PER B/P FROM:2113-29-0001	2113-29-0003	W-I	2113-29-0003	1.000

WAVETEK PARTS LIST	HARNESS,BC-3-A	1219-00-0324 PAGE: 1	A REV

REFERENCE DESIGNATORS	PART DESCRIPTION	ORIG-MFGR-PART-NO	MFGR	WAVETEK NO.	QTY
15	WIRE,18,BL FROM:6012-31-8999	6012-31-8666	W-I	6012-31-8666	13.000
16	WIRE,18,BN FROM:6012-31-8999	6012-31-8111	W-I	6012-31-8111	22.000
S01	SWITCH,TOGGLE DPDT	9201P3HZQ	C-K	5106-00-0016	1.000

WAVETEK PARTS LIST	HARNESS,BC-3-C	1219-00-0326 PAGE: 1	B REV

SECTION 8
SCHEMATIC LIST
1855B

Top View
Bottom View
Wiring Dagram
Main Boards 1 & 2
DPS10 PC Layout
DPS10 Schematic
Front Panel Board Schematic
Microprocessor Board Schematic
Latch Card, Schematic
Ramp Card PC Layout
Ramp Card Schematic
M135-50 Schematic
M171 PC Layout
M171 Schematic
M9L-1 Schematic
M138 PC Layout
M138 Schematic

SCHEMATIC LIST
1865B

Top View
Bottom View
Wiring Diagram
M117 Schematic
M118 Schematic
M119-50/-155/-43 Band Pass
M119 Phase Lock PC Layout
M119-50 Schematic
CRT Schematic
Timing Card PC Layout
Timing Card Schematic
Register Card PC Layout
Register Card Schematic
Microprocessor Card PC Layout
Microprocessor Card Schematic
A/D Card PC Layout
A/D Card Schematic
Power Supply DPS5 Layout
Power Supply DPS5 Schematic
Power Supply DPS3 & 4 Layout
Power Supply DPS4 Schematic
Power Supply DPS3 Schematic
Power Supply DPS1 & 2 Layout
Power Supply DPS1 & 2 Schematic

SCHEMATIC LIST

OPTIONS

M135-5 Schematic

M135-155 Diode Switch PC Layout

M135-155 PC Layout

M135-155 Schematic

M119-155 Osc. PC Layout

M119-155 Diode Switch PC Layout

M119-155 Schematic

M119-5 Osc. PC Layout

M119-5 Band Pass Amp PC Layout

M119-5 Schematic

M113 Pilot Carrier Notch Schematic

M152 PC Layout

M152 Schematic

BC-3 Wiring Diagram

BC-3 PC Layout

BC-3 PC Schematic

CRW-1 Installation Assembly Drawing

CRW-1/1865 Mod. Kit Wiring Diagram

CRW-1/1865 Interface Wiring Diagram

CRW-1/1865 Option Board Schematic

CRW-1 Wiring Diagram

Card Reader Board PC Layout

Card Reader Board Schematic

ME-1 PC Layout

ME-1 PC Schematic

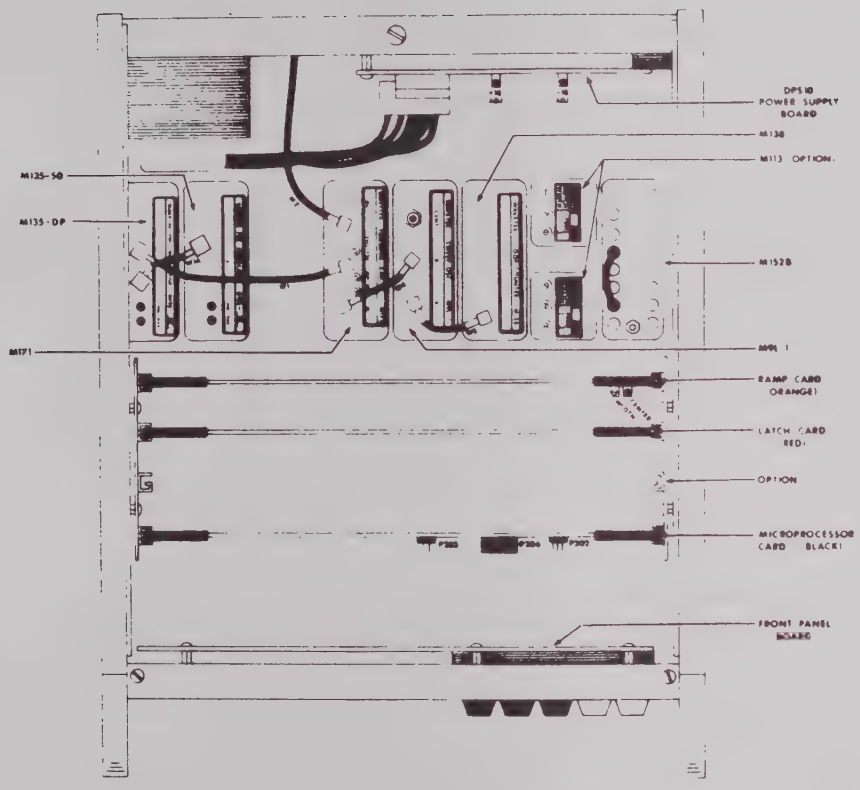
DPS10
POWER SUPPLY
BOARD
M138
M113 OPTION
M125-50
M135-DP
M152B
M171
RAMP CARD
ORANGE)
LATCH CARD
RED)
OPTION
MICROPROCESSOR
CARD BLACK)
FRONT PANEL

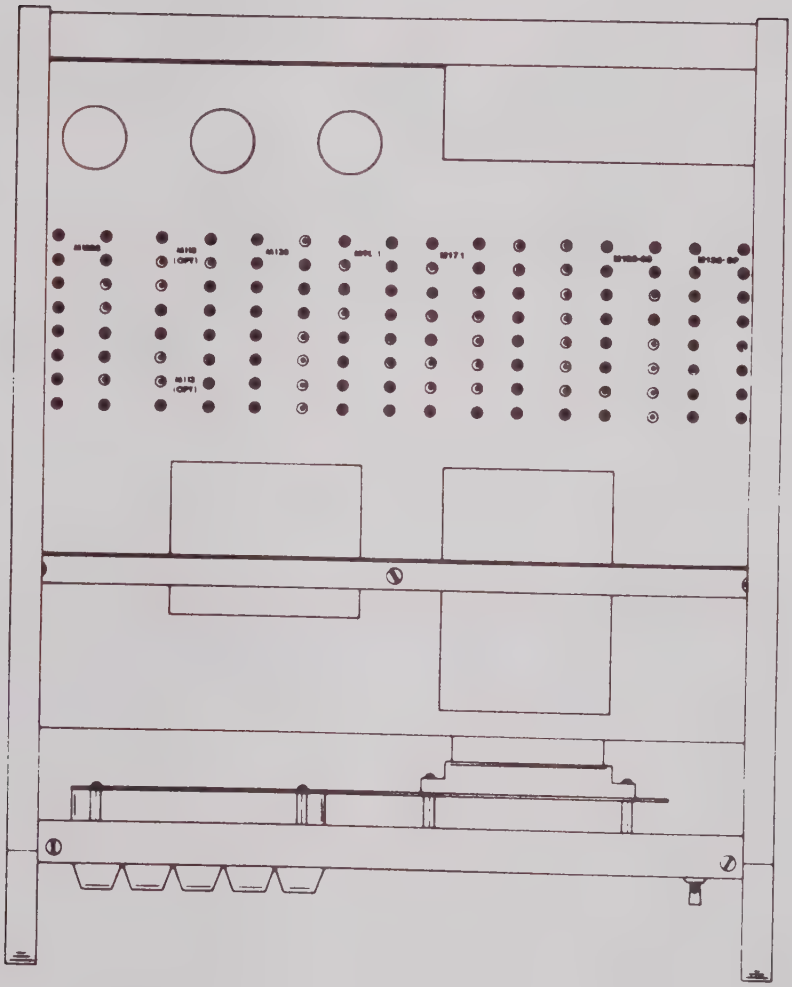

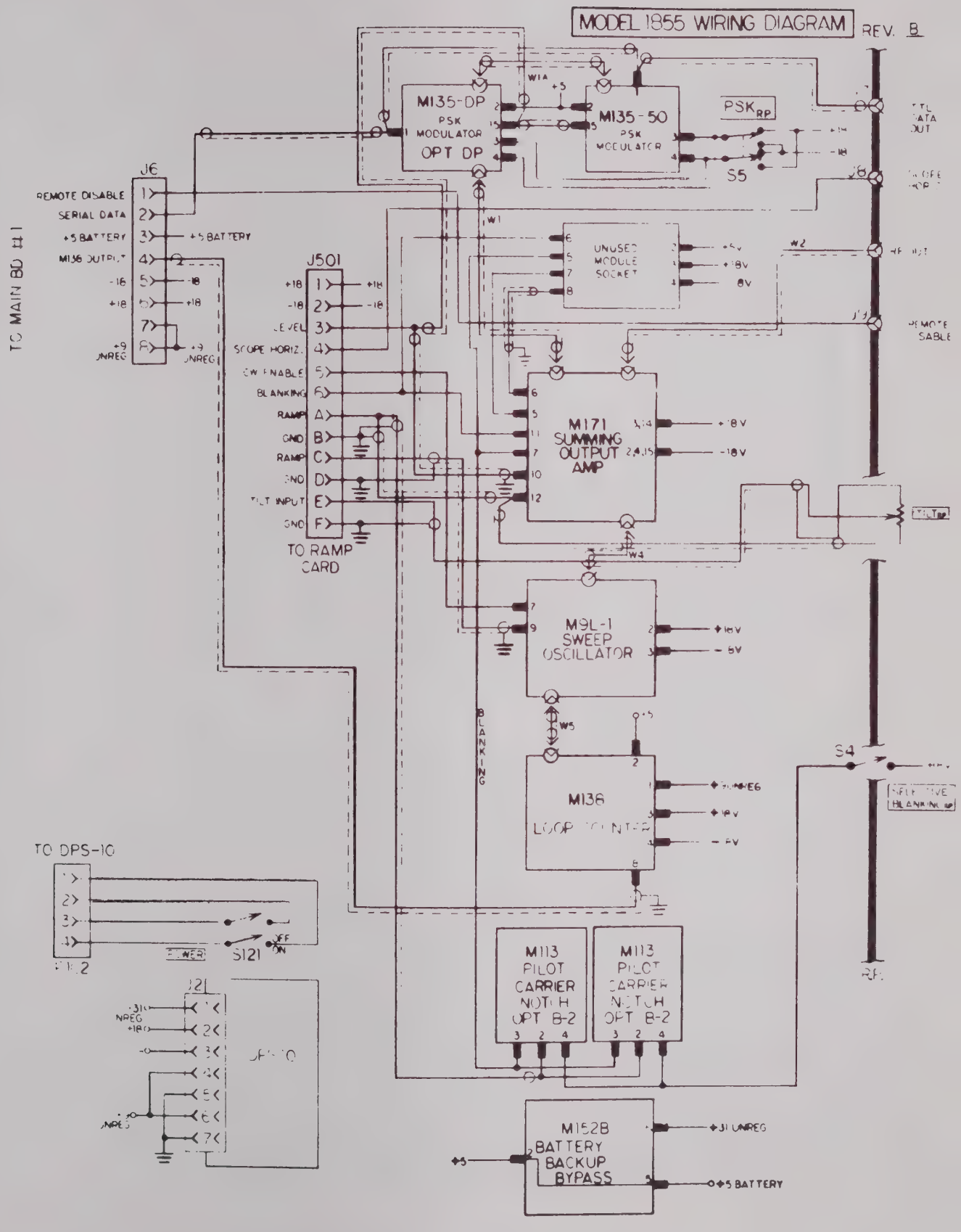
MODEL 1855 WIRING DIAGRAM
REV. B
M135-DP
PSK
MODULATOR
OPT DP
M135-50
PSK
MODULATOR
PSK RP
S5
J6
REMOTE DISABLE
SERIAL DATA
+5 BATTERY
M136 OUTPUT
-18
+18
+9 UNREG
TO MAIN BD #1
J501
+18
-18
LEVEL
SCOPE HORIZ.
CW ENABLE
BLANKING
RAMP
GND
RAMP
GND
TILT INPUT
GND
TO RAMP CARD
UNUSED MODULE SOCKET
+5V
+18V
-18V
W1
W2
W4
W5
M171
SUMMING
OUTPUT
AMP
+18V
-18V
M9L-1
SWEEP
OSCILLATOR
+18V
-18V
BLANKING
M138
LOOP COUNTER
+9 UNREG
+18V
-18V
S4
TO DPS-10
S121
OFF
ON
J2
M113
PILOT
CARRIER
NOTCH
OPT B-2
M113
PILOT
CARRIER
NOTCH
OPT B-2
M152B
BATTERY
BACKUP
BYPASS
+31 UNREG
+5 BATTERY
+5

TO HARNESS
J401
J301
J201
LATCH CARD
OPTION CARD
μP CARD
BOARD 1
P101
TO FRONT PANEL
TO RAMP CARD
J502
BOARD 2
J402
TO LATCH CARD
1455
MAIN BOARDS
1 AND 2

DPS 10

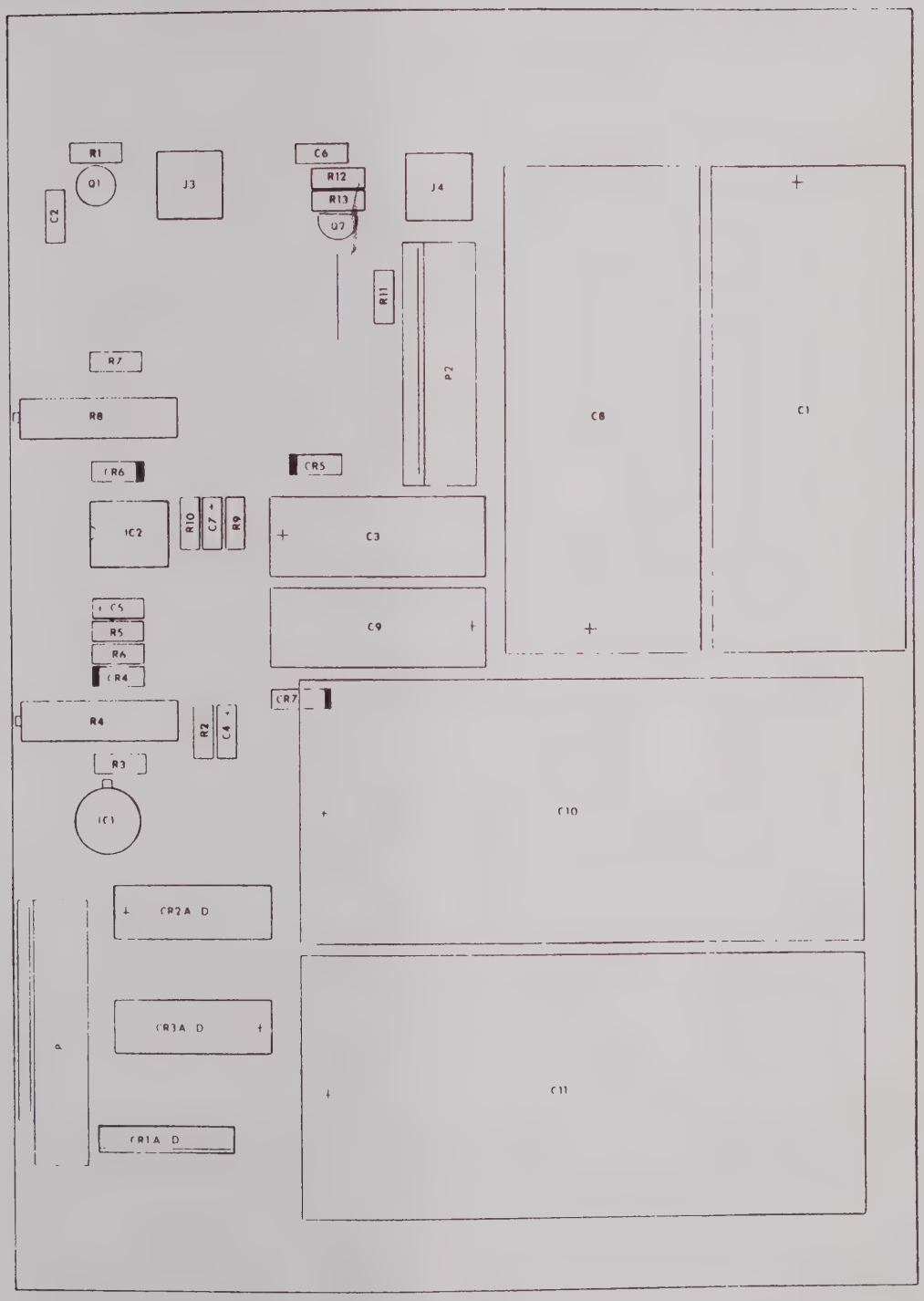
R1
Q1
J3
C6
R12
R13
Q7
J4
C2
R11
P2
C8
C1
R7
R8
CR6
CR5
IC2
R10
C7
R9
C3
C5
R5
R6
CR4
C9
CR7
R4
R2
C4
R3
IC1
C10
CR2A D
CR3A D
P
C11
CR1A D

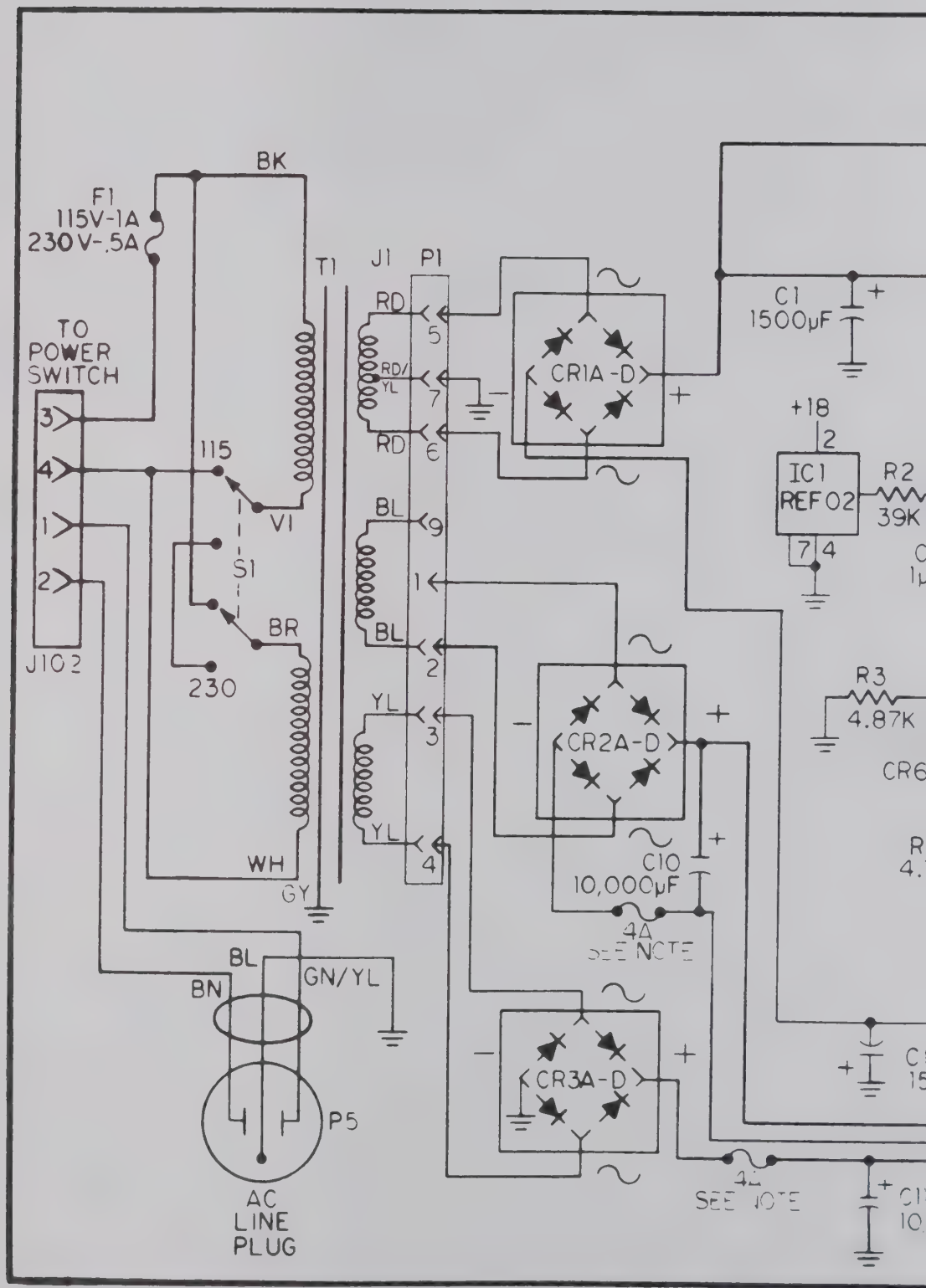
BK
F1
115V-1A
230V-.5A
T1
J1
P1
TO
POWER
SWITCH
3
4
1
2
J102
115
S1
230
VI
BR
WH
GY
RD
RD/
YL
RD
5
7
6
BL
9
1
BL
2
YL
3
YL
4
CR1A-D
CR2A-D
CR3A-D
C1
1500μF
+18
2
IC1
REF02
7
4
R2
39K
R3
4.87K
CR6
C10
10,000μF
4A
SEE NOTE
BL
BN
GN/YL
P5
AC
LINE
PLUG

DPS 10
POWER SUPPLY

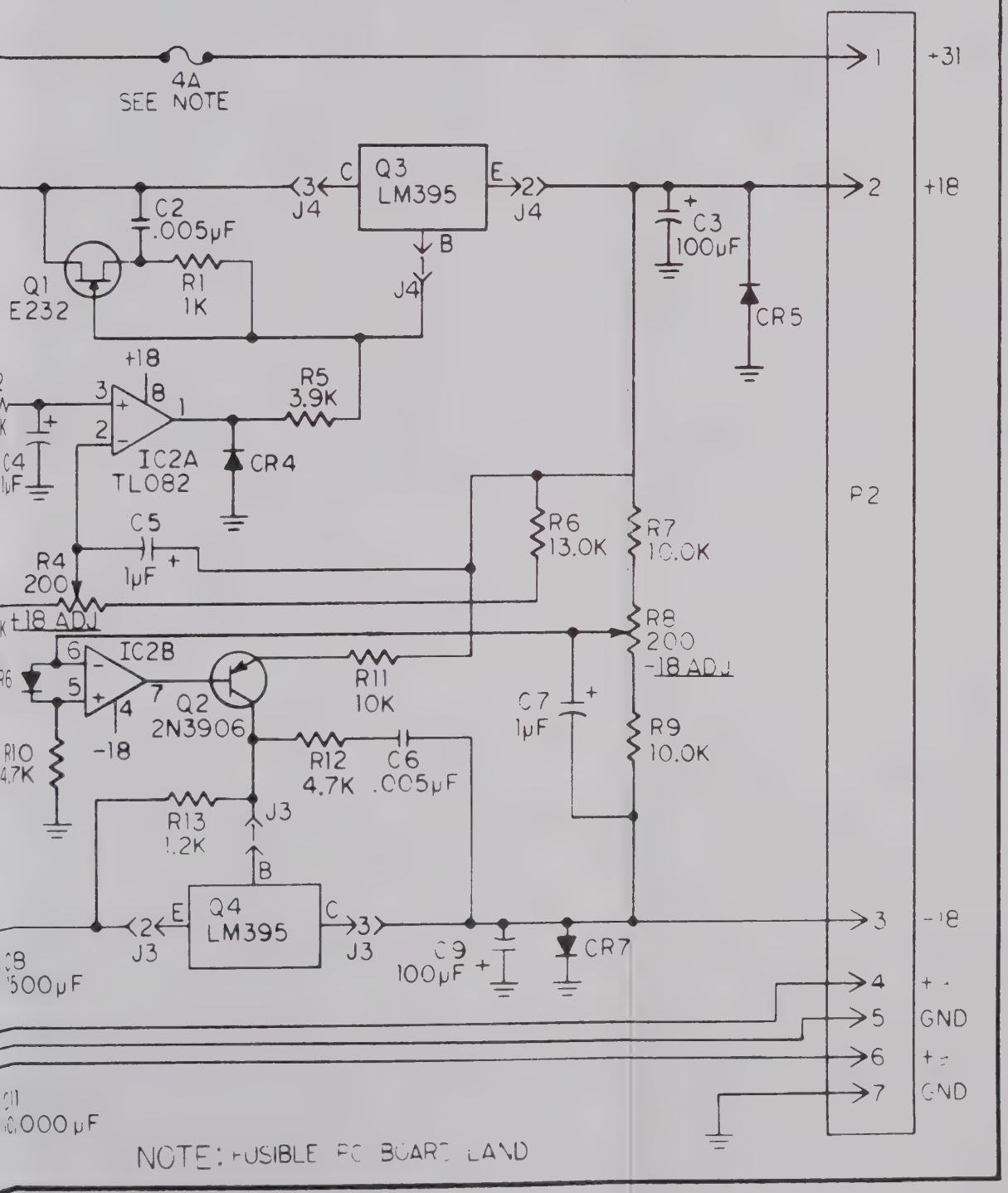

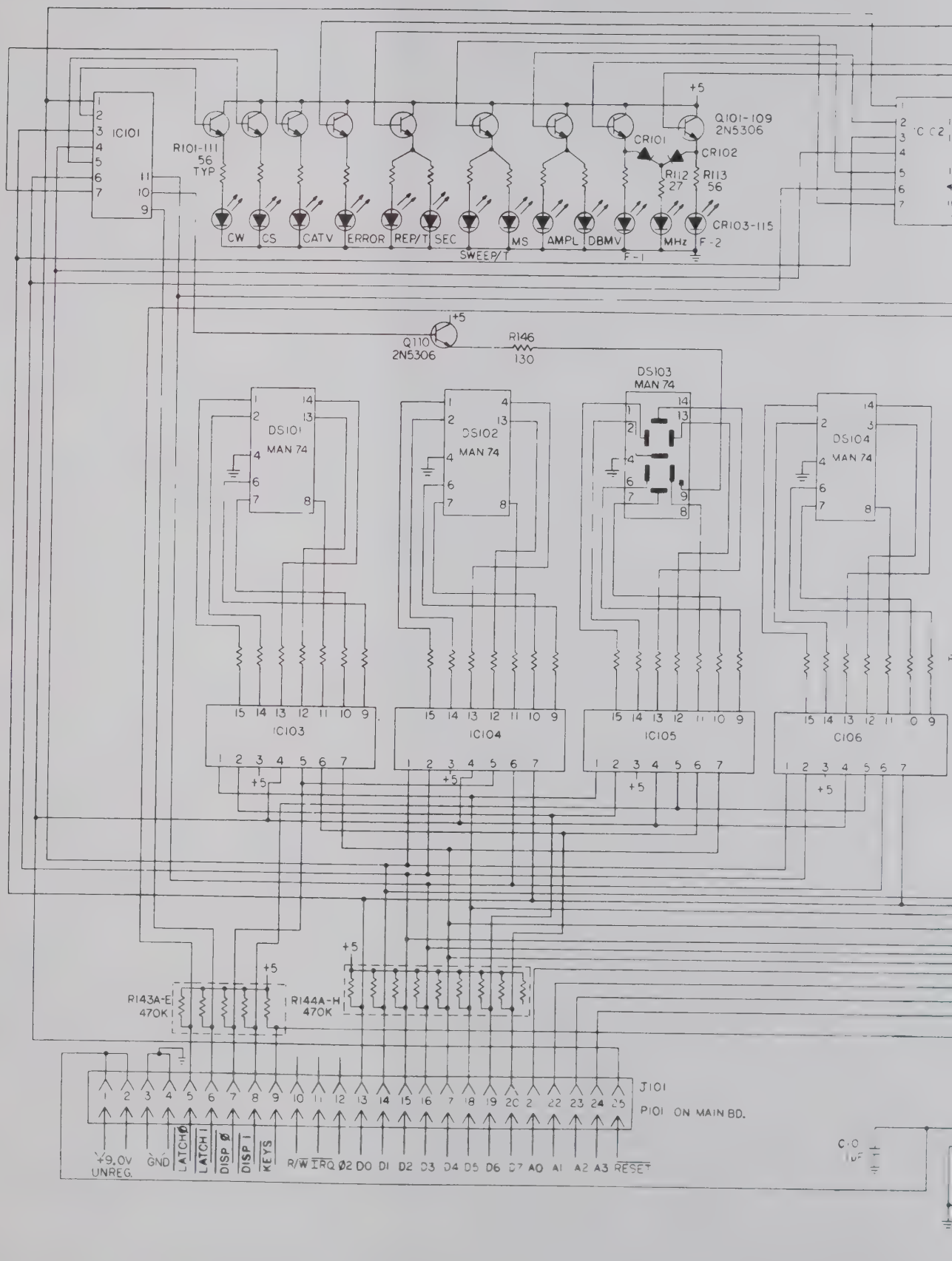
IC101
R101-111
56
TYP
Q101-109
2N5306
CR101
CR102
R112
27
R113
56
CR103-115
CW
CS
CATV
ERROR
REP/T
SEC
SWEEP/T
MS
AMPL
DBMV
MHz
F-1
F-2
Q110
2N5306
R146
130
DS101
MAN 74
DS102
MAN 74
DS103
MAN 74
DS104
MAN 74
IC103
IC104
IC105
C106
R143A-E
470K
R144A-H
470K
J101
P101 ON MAIN BD.
+9.0V
UNREG.
GND
LATCH Ø
LATCH 1
DISP Ø
DISP 1
KEYS
R/W
IRQ
Ø2
DO
DI
D2
D3
D4
D5
D6
D7
AO
A1
A2
A3
RESET

MODEL 1855
FRONT PANEL BOARD

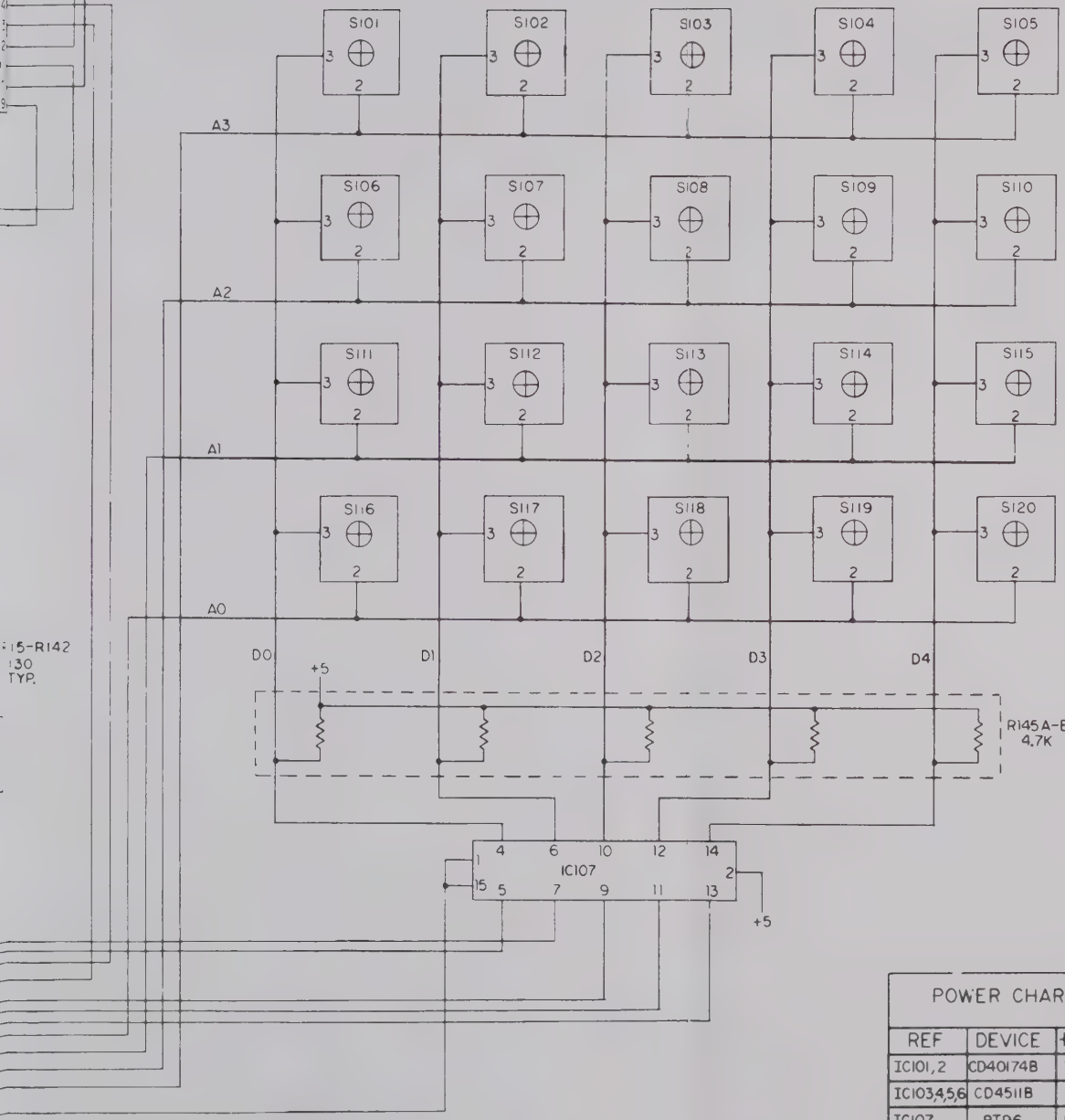

POWER CHART			
REF	DEVICE	+5	GND
IC101,2	CD4017 4B	16	8
IC103,4,5,6	CD4511B	16	8
IC107	8T96	16	8
S101-120	1001SD4A35	4	1

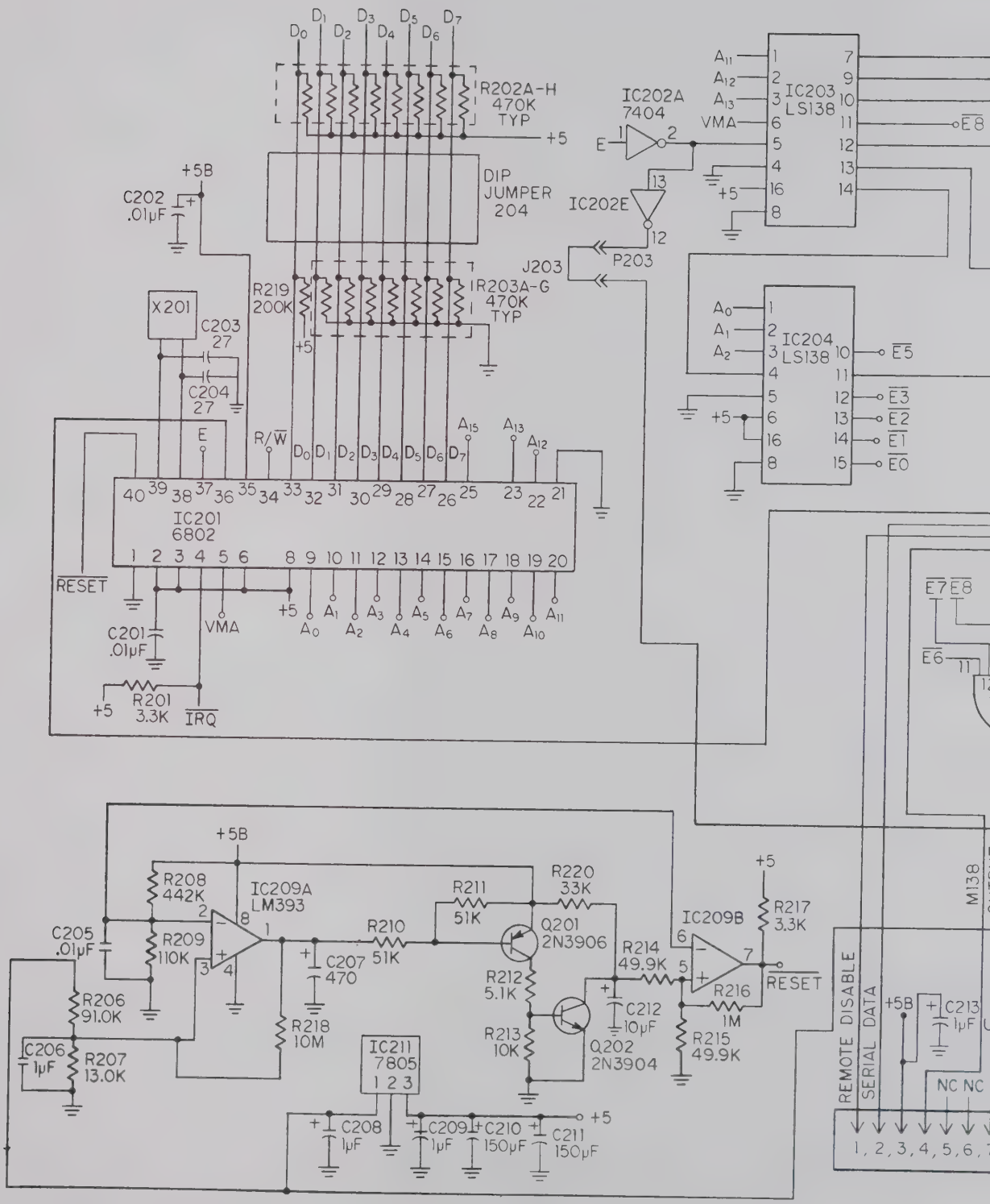
D0 D1 D2 D3 D4 D5 D6 D7
R202A-H 470K TYP
+5
+5B
C202 .01μF
DIP JUMPER 204
R219 200K
R203A-G 470K TYP
X201
C203 27
C204 27
E
R/W
A15
A13
A12
IC201 6802
RESET
VMA
C201 .01μF
R201 3.3K
IRQ
IC202A 7404
IC202E
P203
J203
IC203 LS138
IC204 LS138
A11
A12
A13
VMA
E8
E5
E3
E2
E1
E0
E7
E6
M138
R208 442K
IC209A LM393
R209 110K
C205 .01μF
R206 91.0K
C206 1μF
R207 13.0K
R210 51K
C207 470
R218 10M
R211 51K
R220 33K
Q201 2N3906
R212 5.1K
R213 10K
Q202 2N3904
C212 10μF
R214 49.9K
R215 49.9K
IC209B
R216 1M
R217 3.3K
RESET
IC211 7805
C208 1μF
C209 1μF
C210 150μF
C211 150μF
REMOTE DISABLE
SERIAL DATA
C213 1μF
NC NC
1, 2, 3, 4, 5, 6,

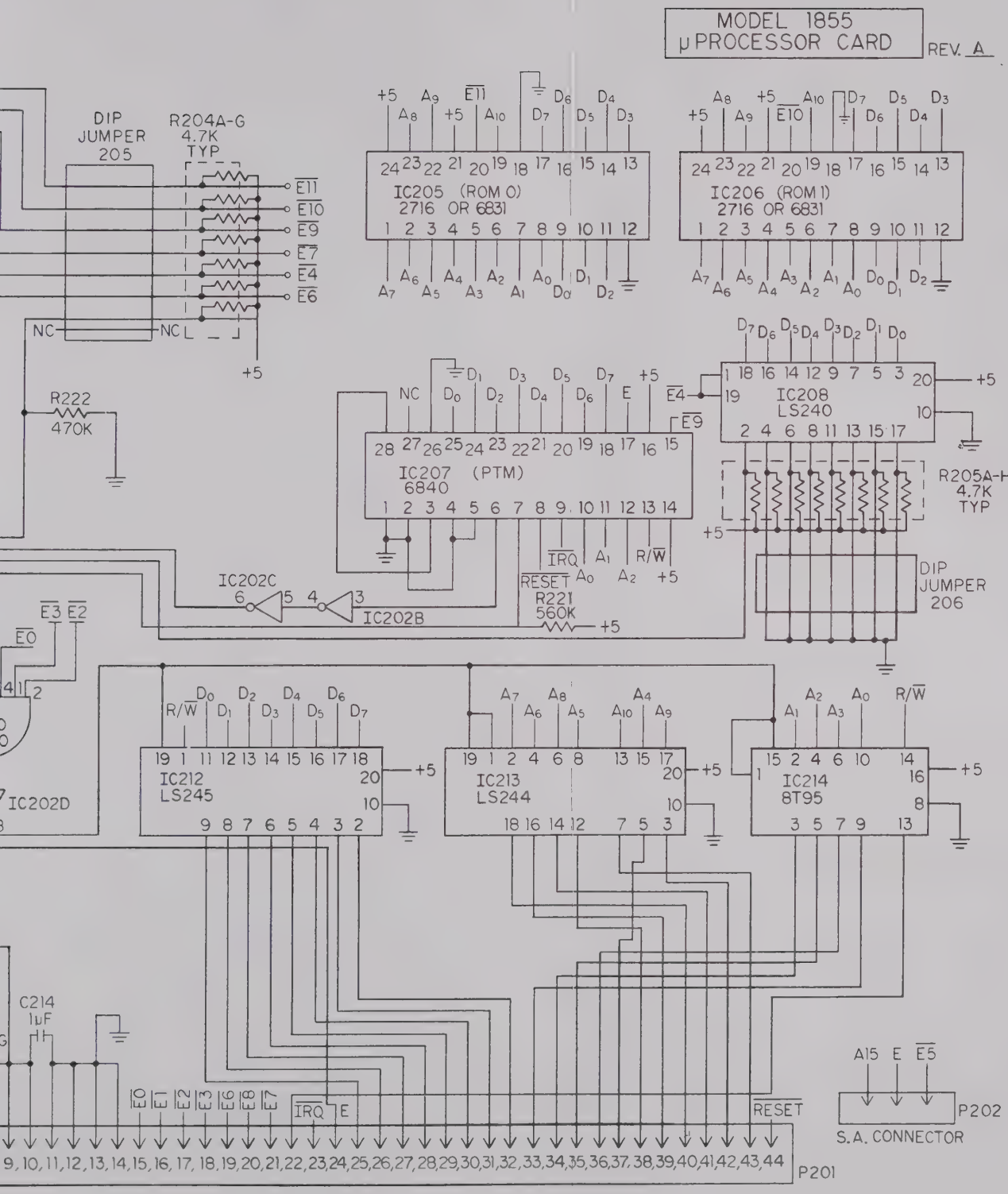
MODEL 1855
μPROCESSOR CARD
REV. A
DIP JUMPER 205
R204A-G 4.7K TYP
IC205 (ROM 0) 2716 OR 6831
IC206 (ROM 1) 2716 OR 6831
IC207 (PTM) 6840
IC208 LS240
R205A-H 4.7K TYP
R222 470K
R221 560K
IC202C
IC202B
IC202D
DIP JUMPER 206
IC212 LS245
IC213 LS244
IC214 8T95
C214 1μF
P201
P202
S.A. CONNECTOR

POWER CHART			
IC-	DEVICE	GND	+5V
402	LS273	10	20
403	"	"	"
405	"	"	"
406	"	"	"
407	"	"	"
408	"	"	"
404	LS175	8	16
410	LS02	7	14
409	LS138	8	16

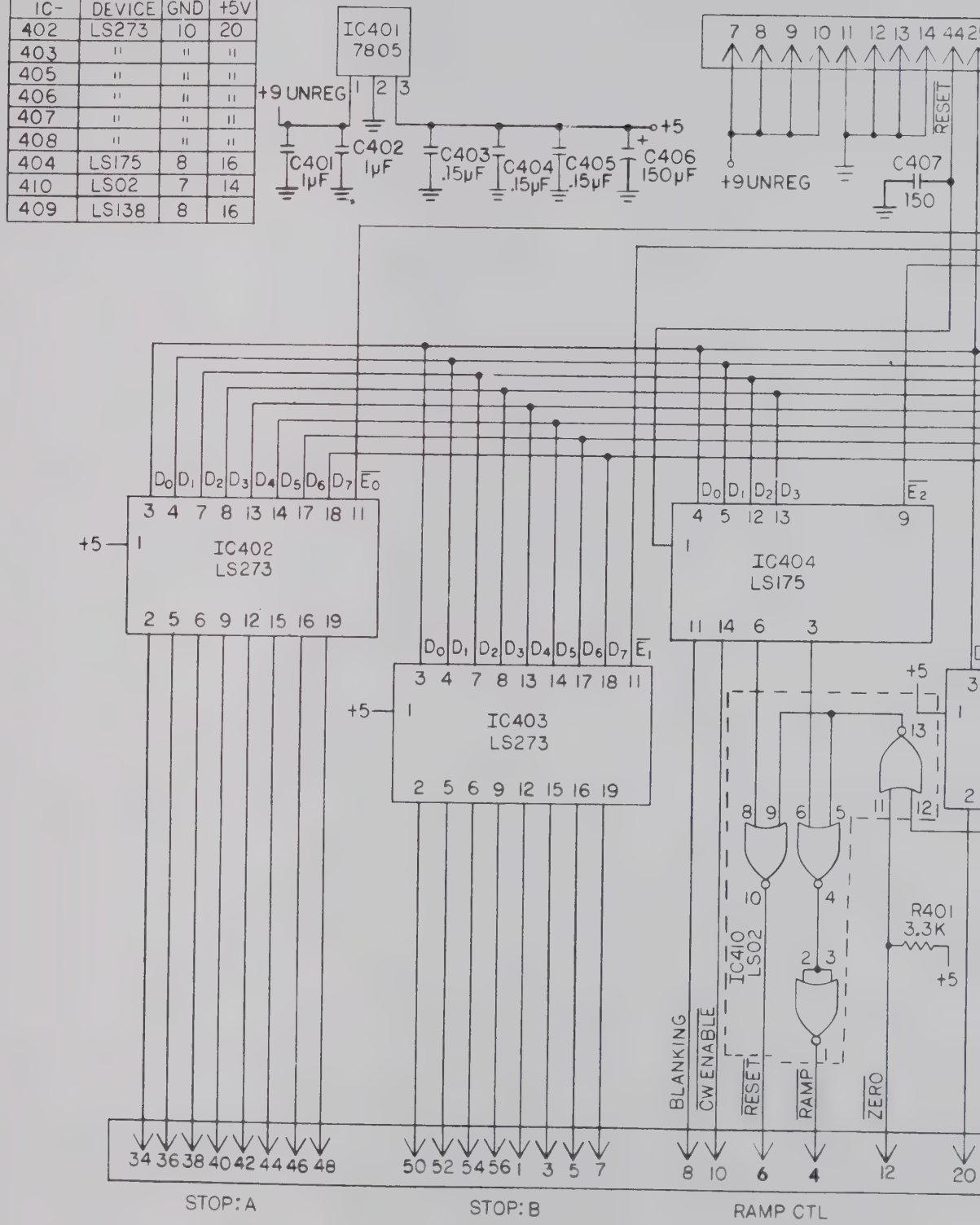

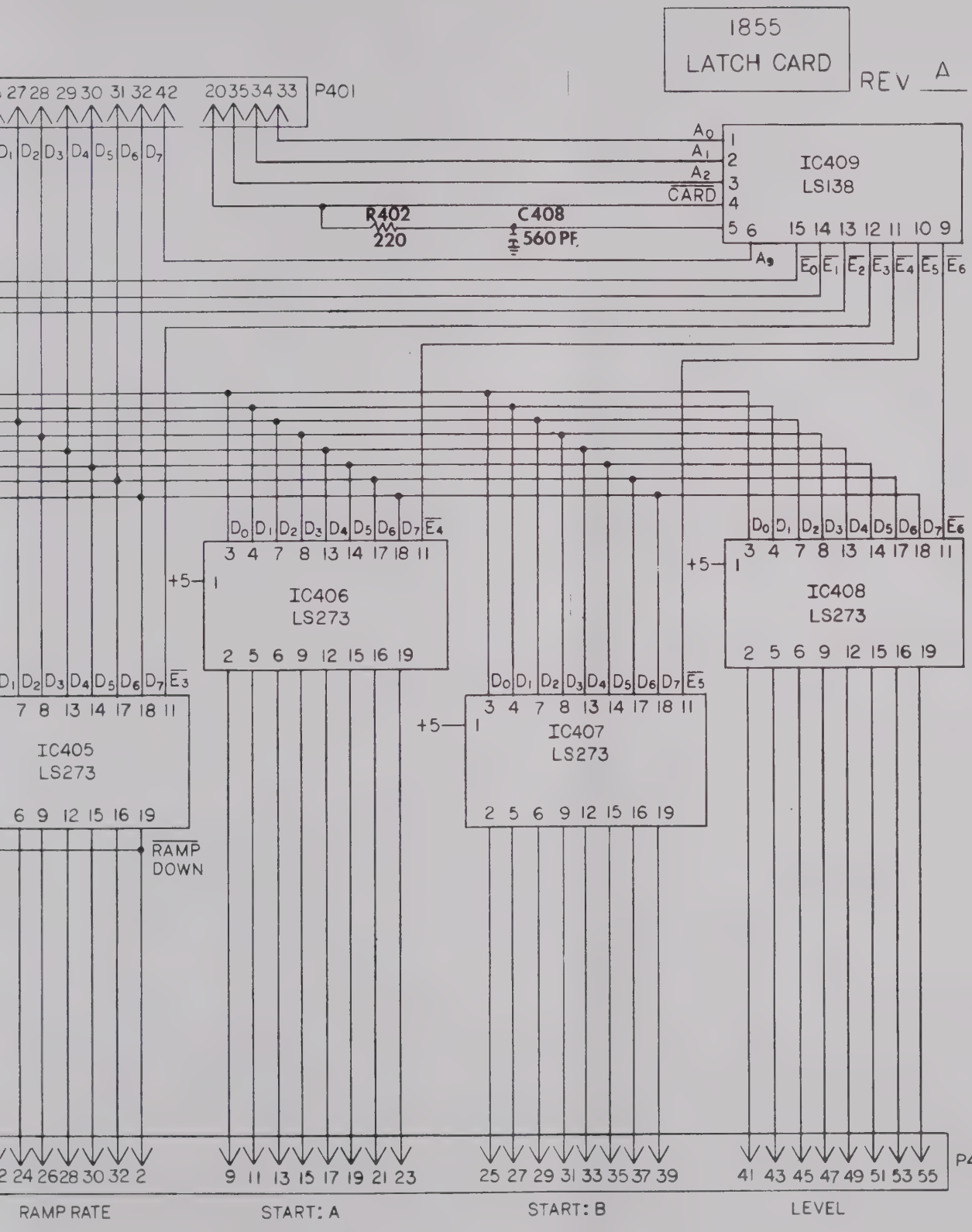
1855
LATCH CARD
REV A
P401
IC409
LS138
R402
220
C408
560 PF.
IC406
LS273
IC408
LS273
IC405
LS273
IC407
LS273
RAMP
DOWN
P402
RAMP RATE
START: A
START: B
LEVEL

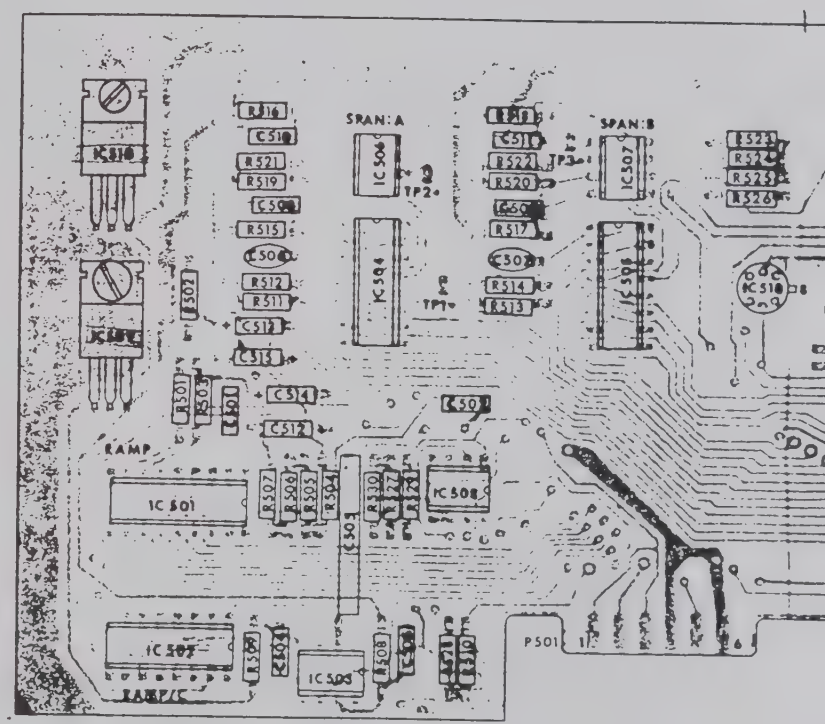
SPAN:A
SPAN:B
IC 506
IC 504
IC 507
IC 508
IC 501
IC 503
IC 510
IC 509
IC 502
IC 505
IC 518
RAMP
RAMP/C
P501
TP1
TP2
TP3
R516
C510
R521
R519
C509
R515
C506
R512
R511
C512
C513
R502
R501
R503
C501
C514
C512
C507
R507
R506
R505
R504
R530
R527
R528
C503
R508
C508
R510
R518
C511
R522
R520
C505
R517
C502
R514
R513
R523
R524
R525
R526

4	3	2	1

REVISIONS			
ZONE	LTR	DESCRIPTION	DATE

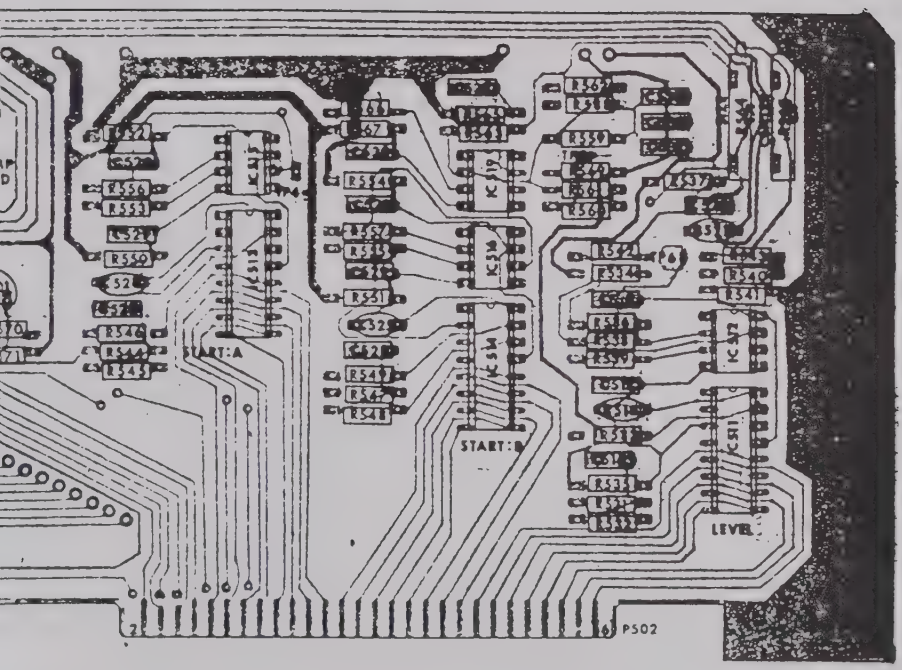

QTY REQD	CODE IDENT	PART OR IDENTIFYING NO	NOMENCLATURE OR DESCRIPTION
			PARTS LIST

UNLESS OTHERWISE SPECIFIED DIMENSIONS ARE IN INCHES
TOLERANCES ARE
FRACTIONS ± DECIMALS .XX ± .XXX ± ANGLES ±

CONTRACT NO

APPROVALS	DATE
DRAWN W PERSON	1-12-[illegible]
CHECKED	

MATERIAL

FINISH

NEXT ASSY | USED ON

APPLICATION

DO NOT SCALE DRAWING

WAVETEK

ASSEMBLY DRAWING
1855 RAMP CARD

SIZE	CODE IDENT NO	DRAWING
D	34280	04[illegible]30[illegible]0085

SCALE 2:1

4	3	2	1

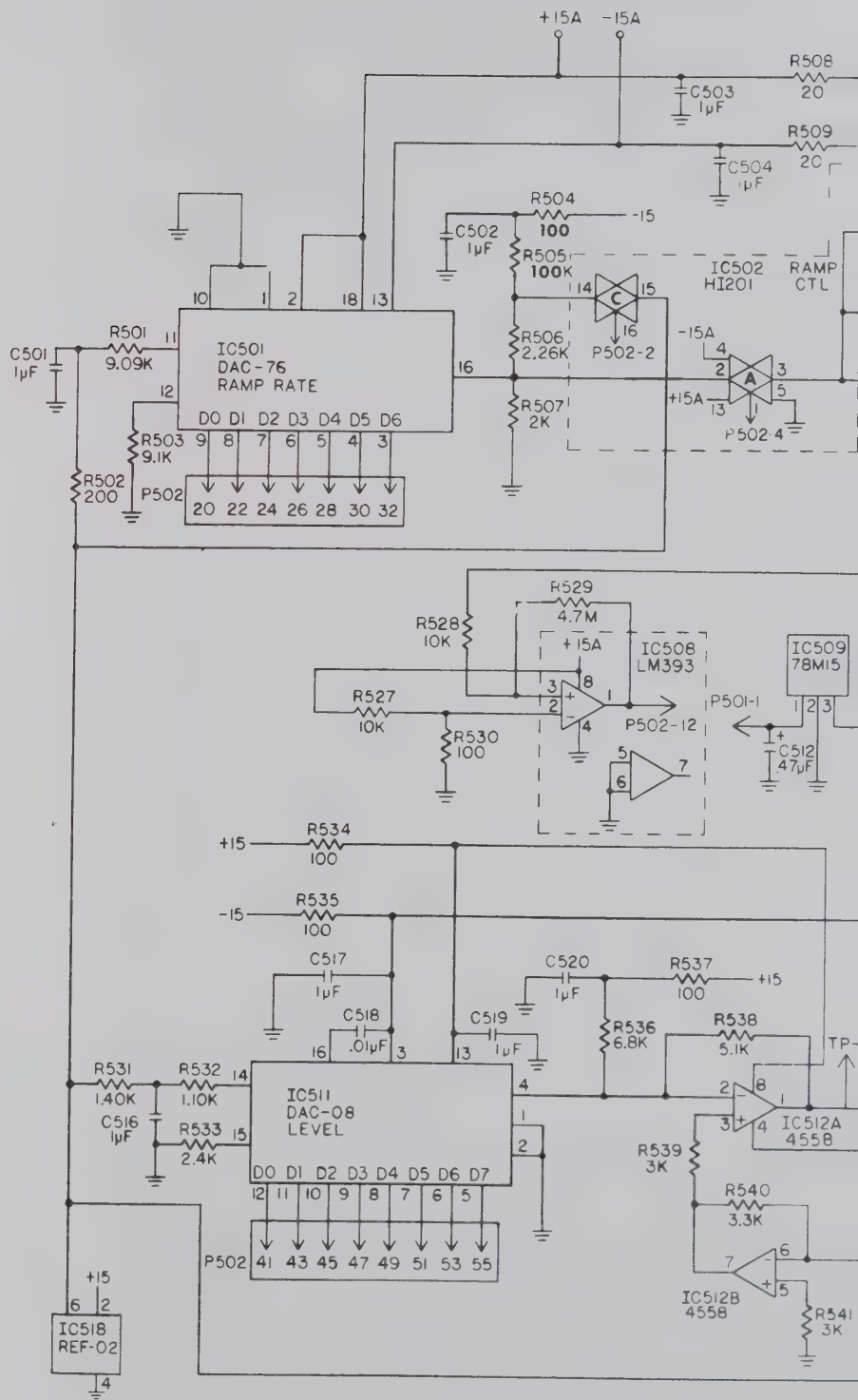
+15A
-15A
R508
20
C503
1μF
R509
20
C504
1μF
R504
100
-15
C502
1μF
R505
100K
IC502
HI201
RAMP
CTL
P502-2
-15A
+15A
P502-4
R501
9.09K
C501
1μF
IC501
DAC-76
RAMP RATE
D0 D1 D2 D3 D4 D5 D6
R503
9.1K
R502
200
P502
20 22 24 26 28 30 32
R506
2.26K
R507
2K
R529
4.7M
R528
10K
+15A
IC508
LM393
IC509
78M15
R527
10K
R530
100
P501-1
P502-12
C512
47μF
+15
R534
100
-15
R535
100
C517
1μF
C518
.01μF
C519
1μF
C520
1μF
R537
100
+15
R538
5.1K
R536
6.8K
TP-
R531
1.40K
R532
1.10K
C516
1μF
R533
2.4K
IC511
DAC-08
LEVEL
D0 D1 D2 D3 D4 D5 D6 D7
P502
41 43 45 47 49 51 53 55
IC512A
4558
R539
3K
R540
3.3K
IC512B
4558
R541
3K
+15
IC518
REF-02

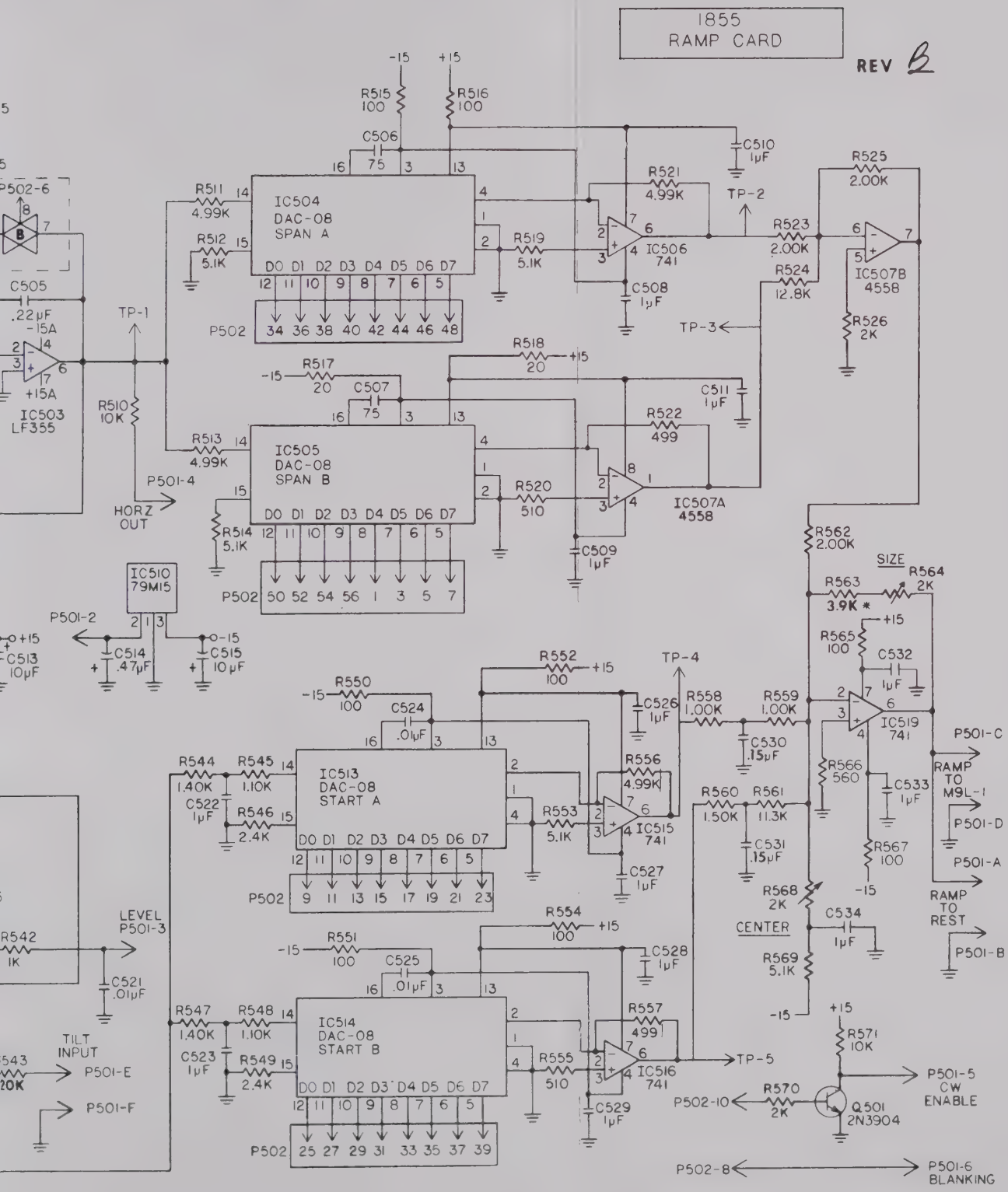
1855
RAMP CARD
REV B
IC504
DAC-08
SPAN A
IC505
DAC-08
SPAN B
IC506
741
IC507A
4558
IC507B
4558
IC503
LF355
IC510
79M15
IC513
DAC-08
START A
IC514
DAC-08
START B
IC515
741
IC516
741
IC519
741
Q501
2N3904
P502
P501-4
HORZ
OUT
P501-2
P501-3
LEVEL
P501-E
P501-F
TILT
INPUT
TP-1
TP-2
TP-3
TP-4
TP-5
SIZE
CENTER
P501-C
RAMP
TO
M9L-1
P501-D
P501-A
RAMP
TO
REST
P501-B
P501-5
CW
ENABLE
P502-10
P502-8
P501-6
BLANKING

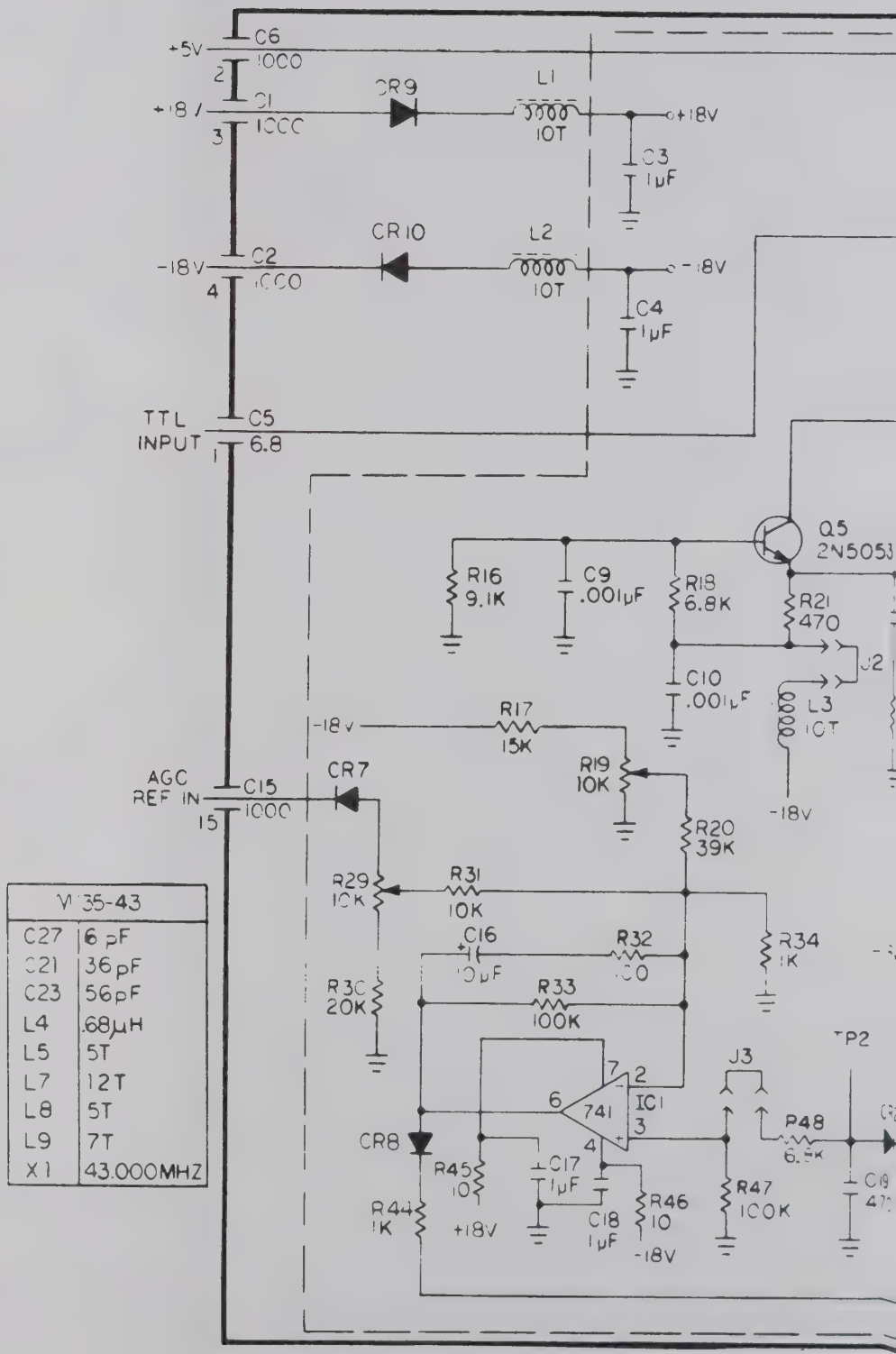

V1 35-43	
C27	6 pF
C21	36 pF
C23	56 pF
L4	.68μH
L5	5T
L7	12T
L8	5T
L9	7T
X1	43.000MHZ

PSK MODULATOR
M135-50

REV A

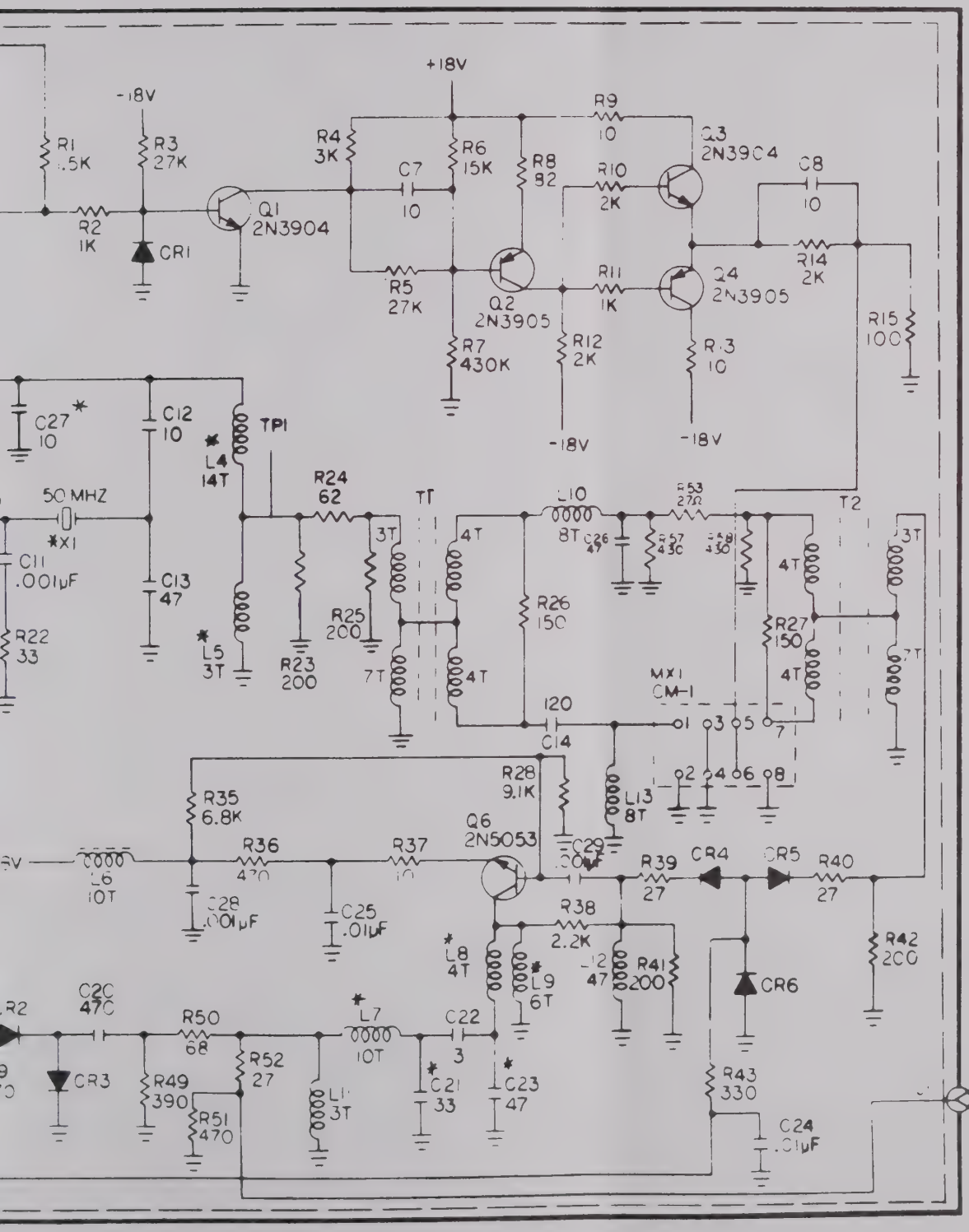

M171

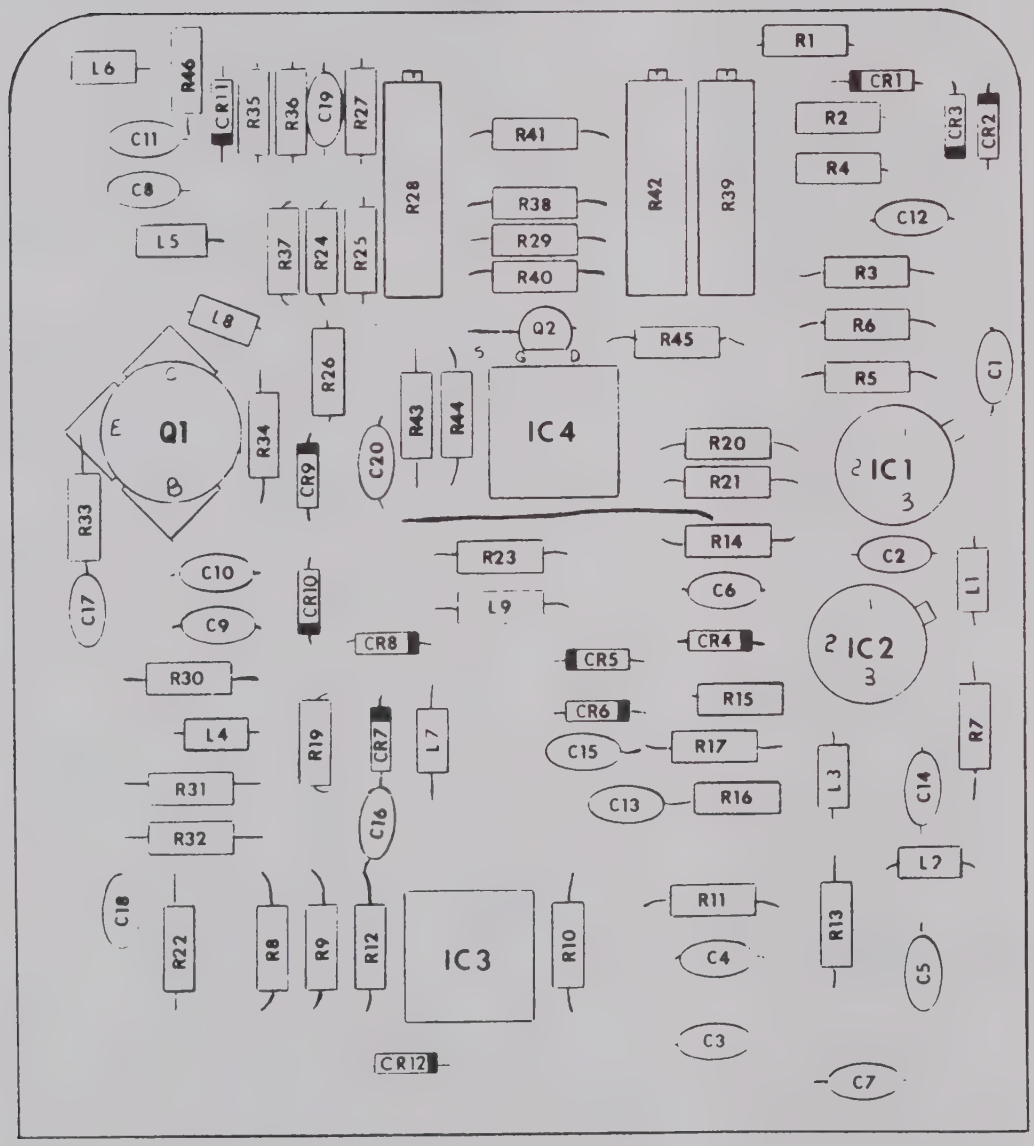

L6
R46
CR11
R35
R36
C19
R27
R28
R41
R42
R39
R1
CR1
R2
CR3
CR2
R4
C11
C8
R38
R29
R40
C12
L5
R37
R24
R25
R3
L8
Q2
R45
R6
R26
R5
C1
Q1
R34
R43
R44
IC4
R20
IC1
CR9
C20
R21
R33
R14
R23
C2
C10
CR10
C6
L1
C17
L9
C9
CR8
CR4
IC2
CR5
R30
R15
CR6
R7
L4
R19
CR7
L7
C15
R17
L3
C14
R31
C13
R16
C16
R32
L2
C18
R11
R13
R22
R8
R9
R12
IC3
R10
C4
C5
C3
CR12
C7

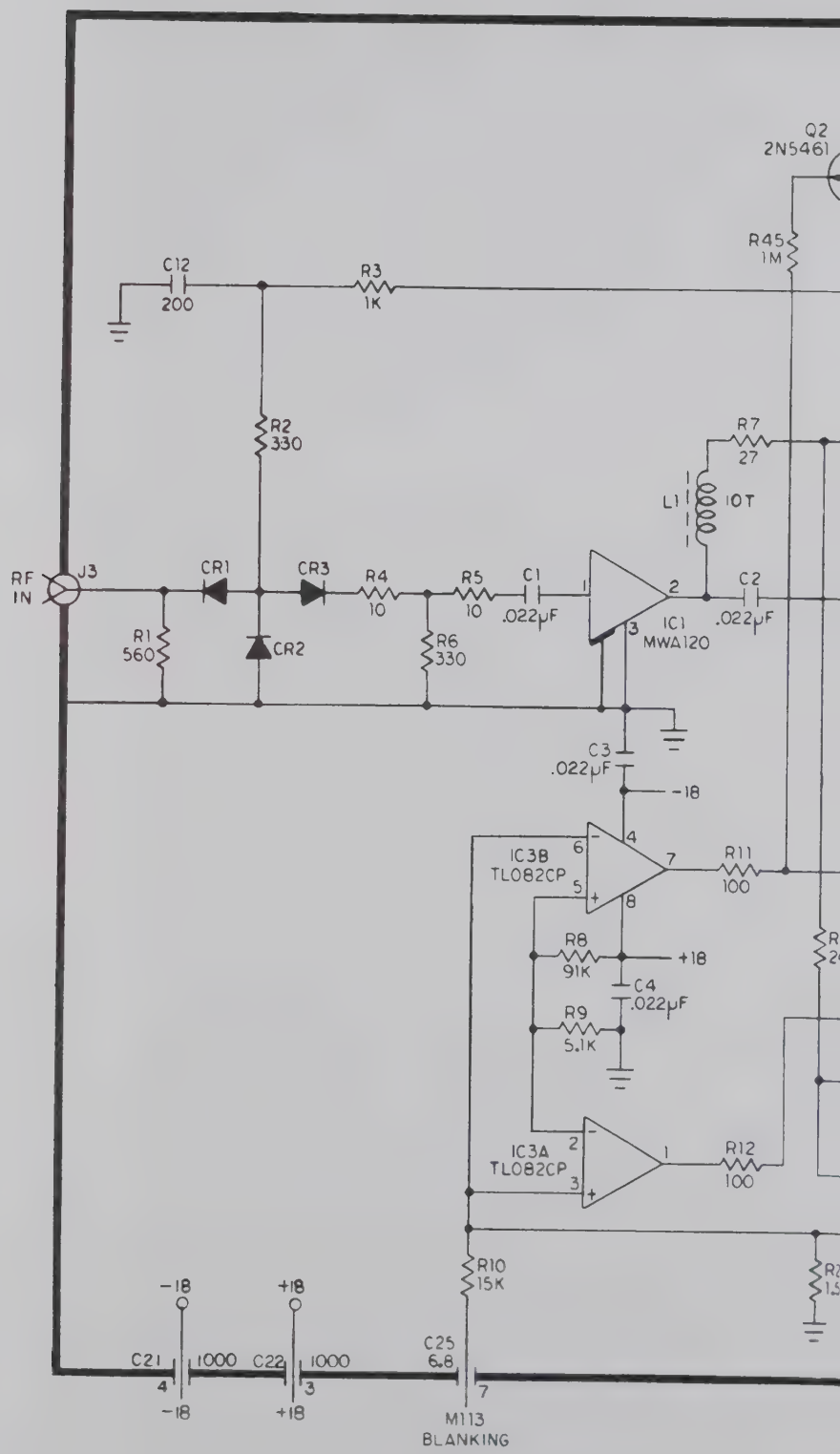
Q2
2N5461
R45
1M
C12
200
R3
1K
R2
330
R7
27
L1
10T
RF
IN
J3
CR1
CR3
R4
10
R5
10
C1
.022μF
C2
.022μF
IC1
MWA120
R1
560
CR2
R6
330
C3
.022μF
-18
IC3B
TL082CP
R11
100
R8
91K
+18
C4
.022μF
R9
5.1K
IC3A
TL082CP
R12
100
R10
15K
-18
+18
C21
1000
C22
1000
C25
6.8
-18
+18
M113
BLANKING

M171
SUMMING AMP
REV. G

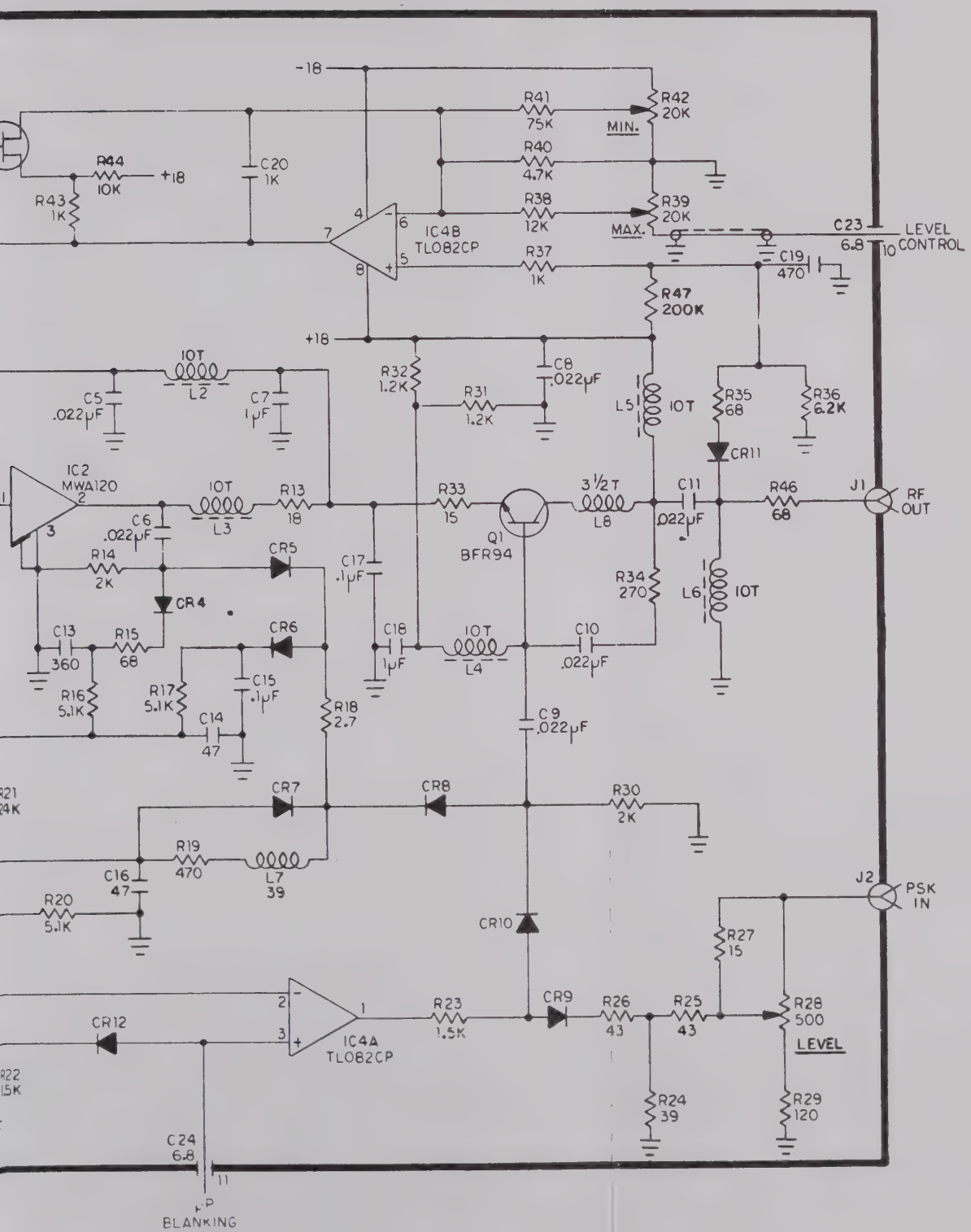

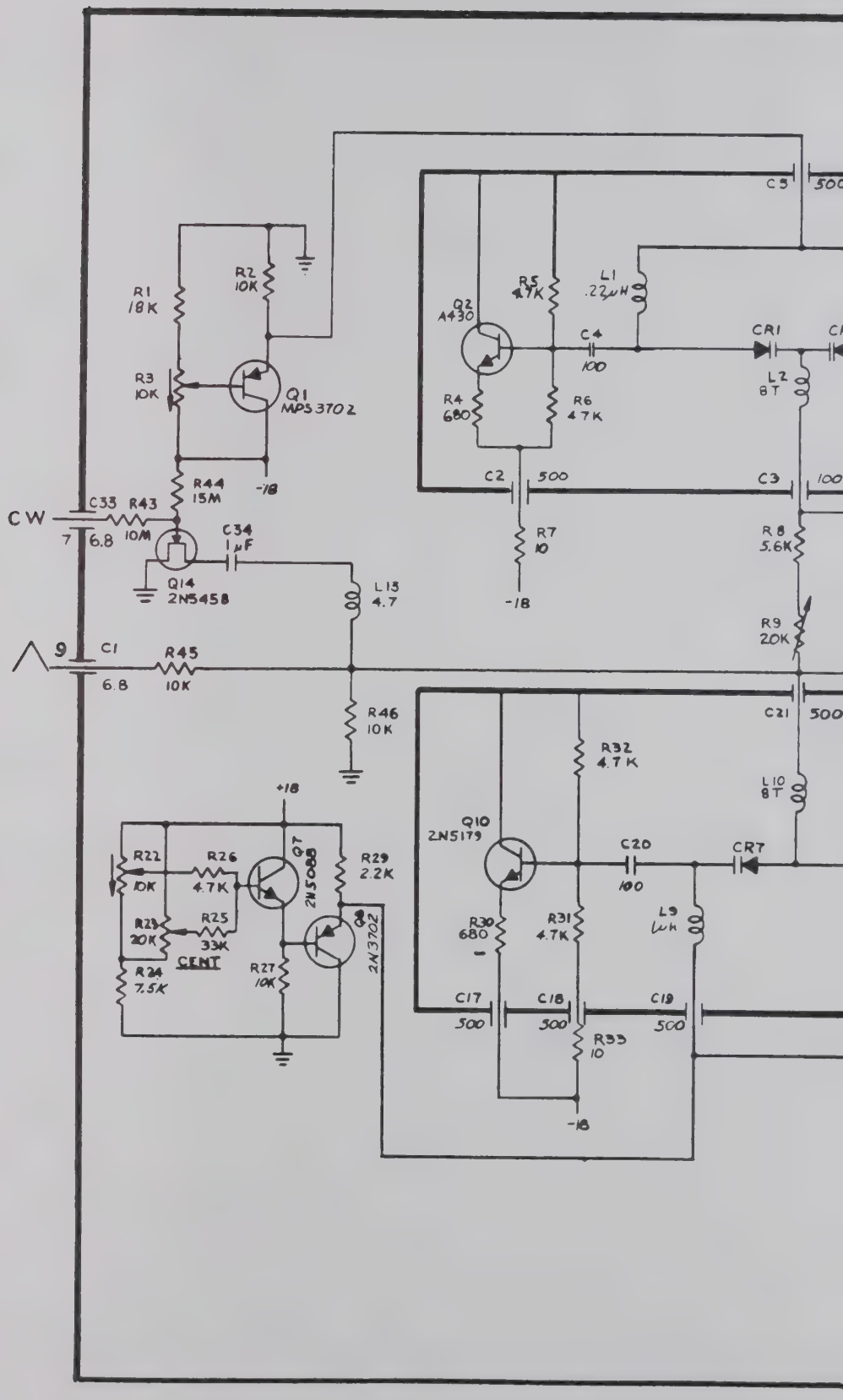
CW
R1 18K
R2 10K
R3 10K
Q1 MPS3702
R44 15M
C33
R43 10M
6.8
C34 1μF
Q14 2N5458
L13 4.7
C1
R45 10K
6.8
R46 10K
-18
+18
R22 10K
R26 4.7K
Q7 2N5088
R29 2.2K
R23 20K
R25 33K
CENT
R24 7.5K
R27 10K
2N3702
Q2 A430
R5 4.7K
L1 .22μH
C4 100
R4 680
R6 4.7K
C5
CR1
L2 8T
C2 500
C3
R7 10
R8 5.6K
R9 20K
C21
R32 4.7K
L10 8T
Q10 2N5179
C20 100
CR7
R30 680
R31 4.7K
L9 1μH
C17 500
C18 500
C19 500
R33 10

OSCILLATOR-MIXER
M9L-1

REV D

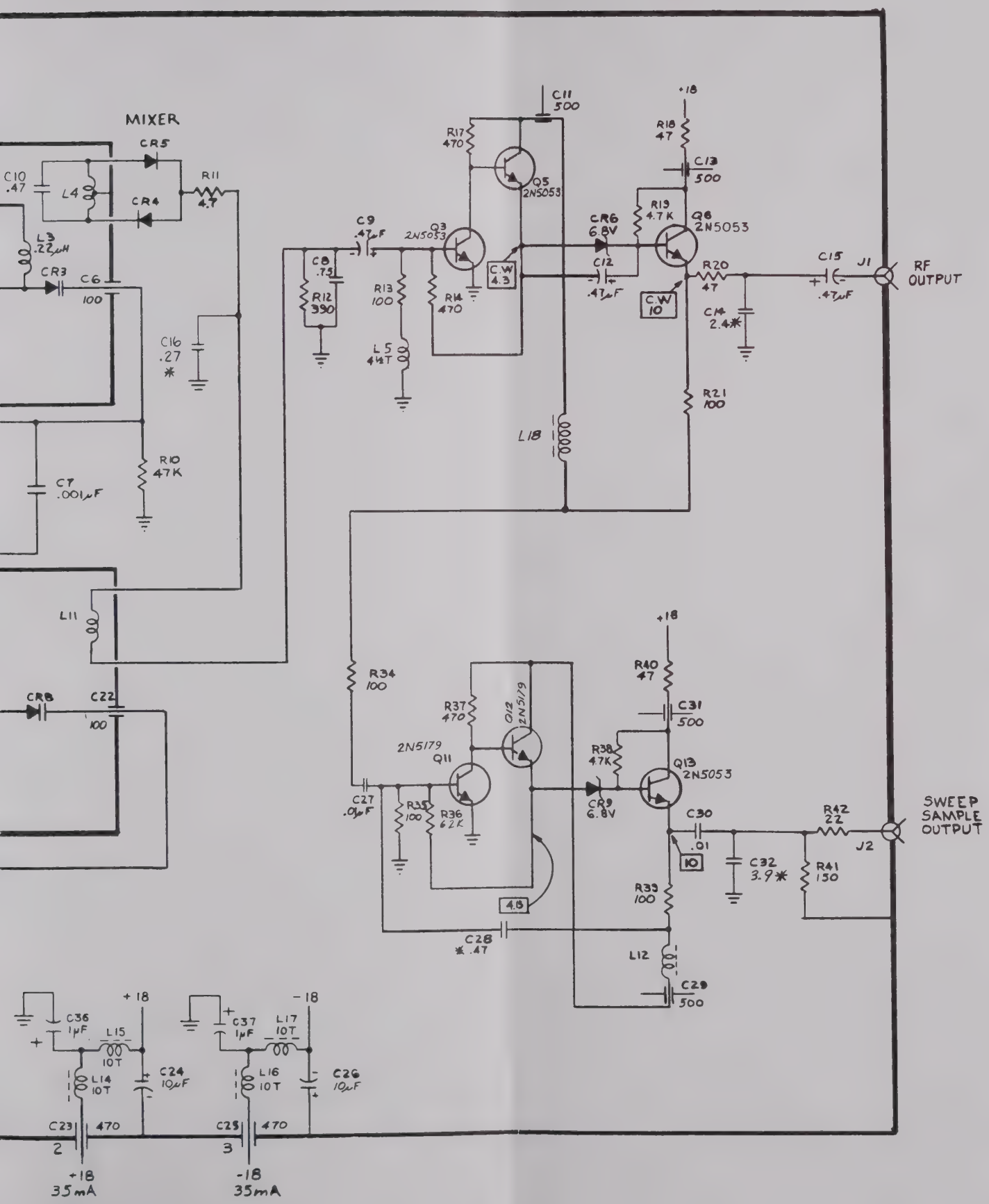

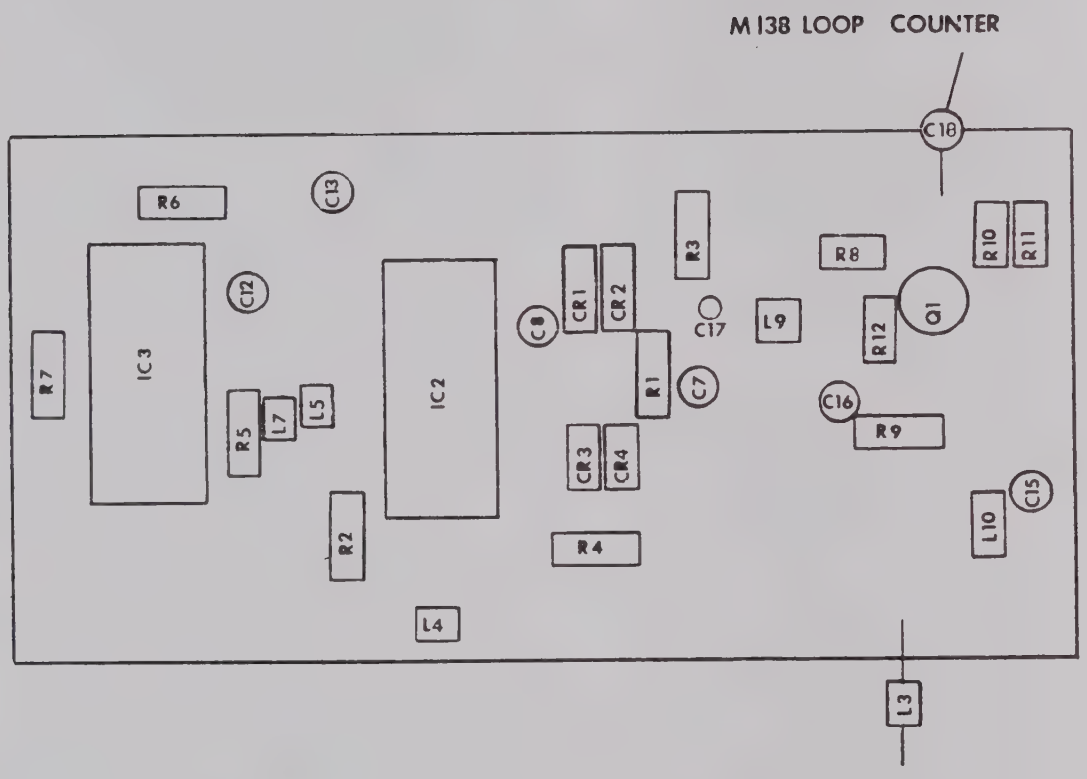
M138 LOOP COUNTER
C18
R6
C13
R3
R8
R10
R11
C12
CR1
CR2
C8
C17
L9
R12
Q1
R7
IC3
IC2
R1
C7
C16
R5
L7
L5
R9
CR3
CR4
C15
L10
R2
R4
L4
L3

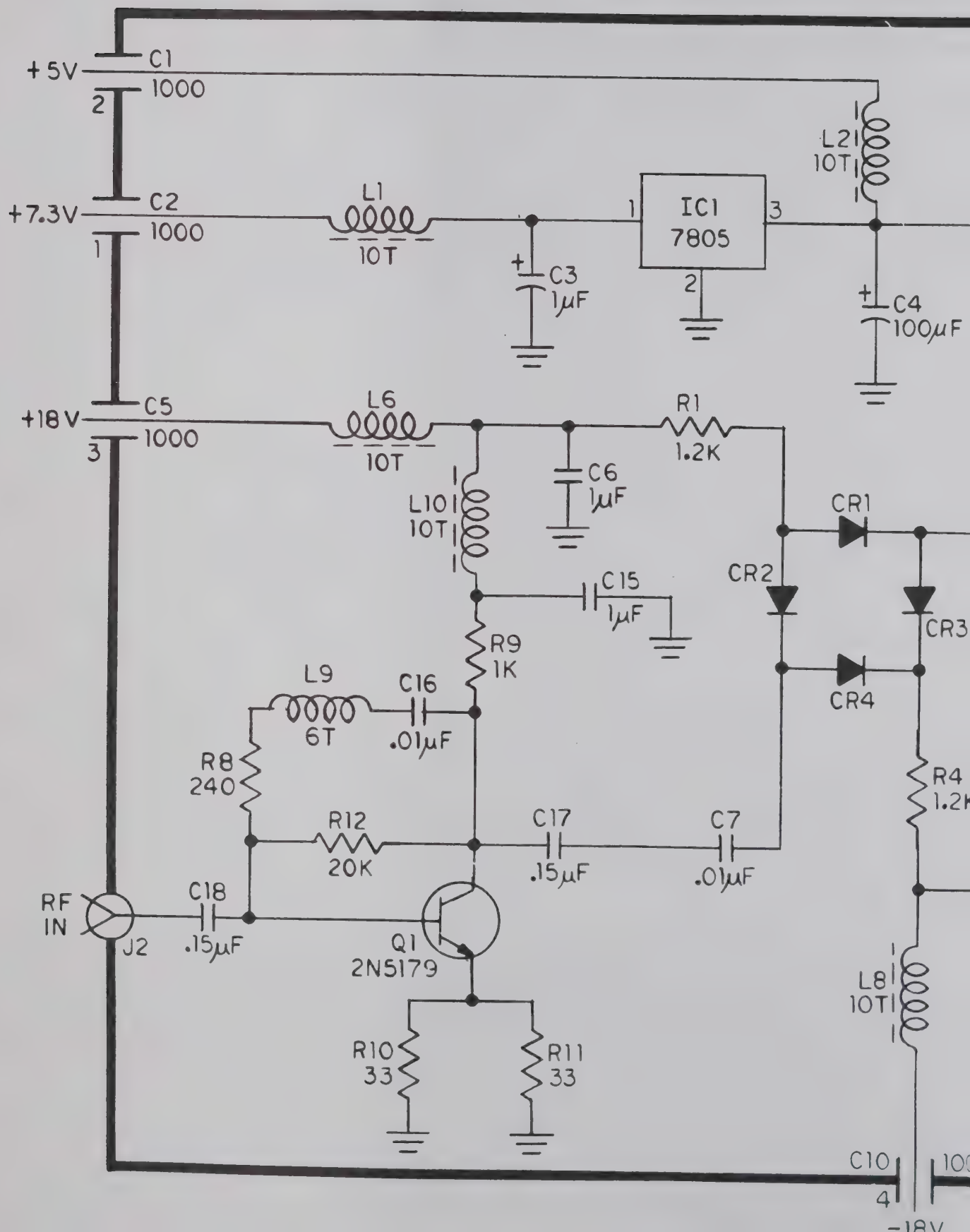
+5V
C1
1000
2
+7.3V
C2
1000
1
+18V
C5
1000
3
L1
10T
IC1
7805
1
2
3
C3
1μF
L2
10T
C4
100μF
L6
10T
R1
1.2K
C6
1μF
L10
10T
CR1
CR2
CR3
CR4
C15
1μF
R9
1K
L9
6T
C16
.01μF
R8
240
R12
20K
C17
.15μF
C7
.01μF
R4
1.2K
RF
IN
J2
C18
.15μF
Q1
2N5179
R10
33
R11
33
L8
10T
C10
4
-18V

LOOP COUNTER
M138

REV B

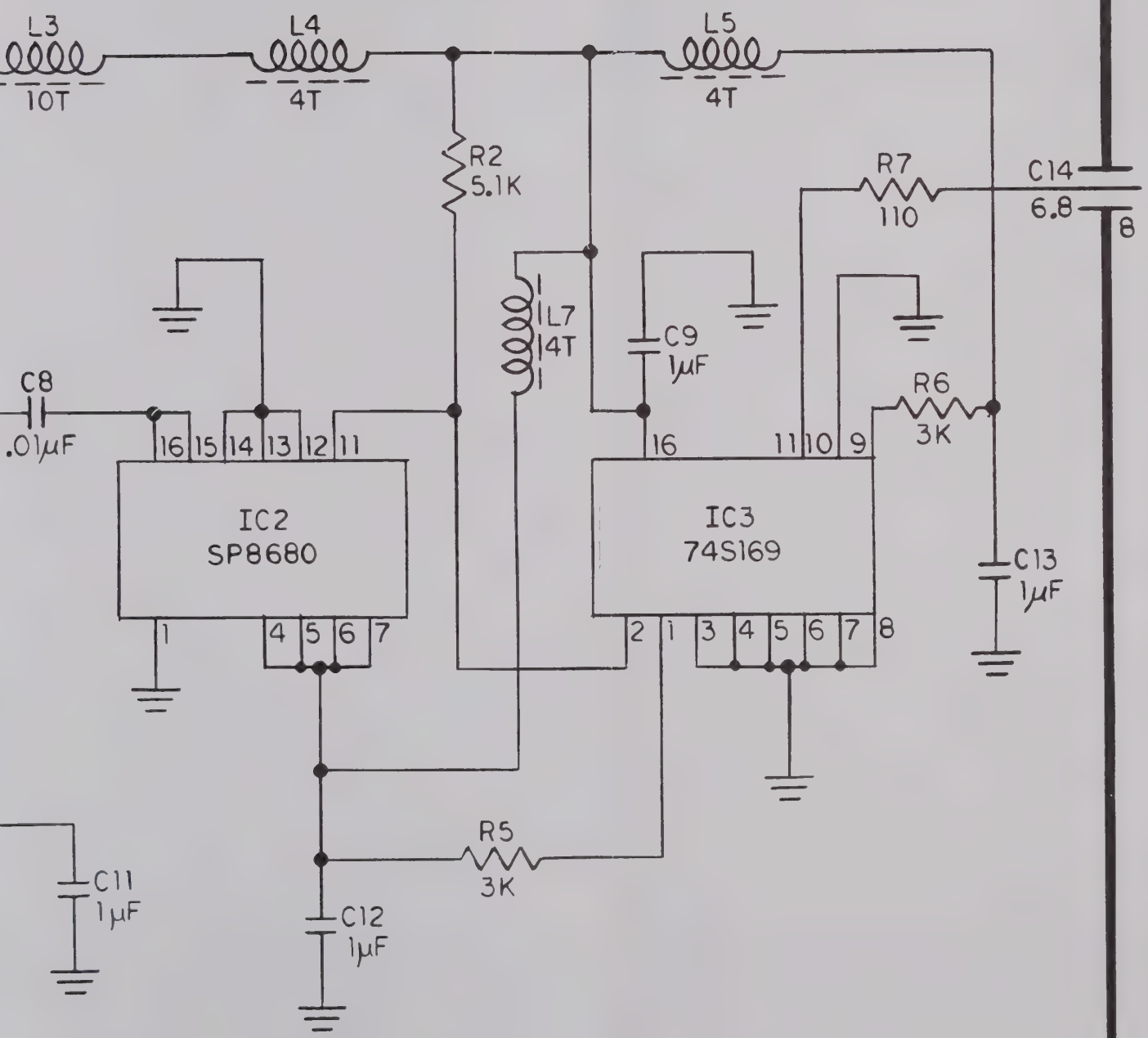

00

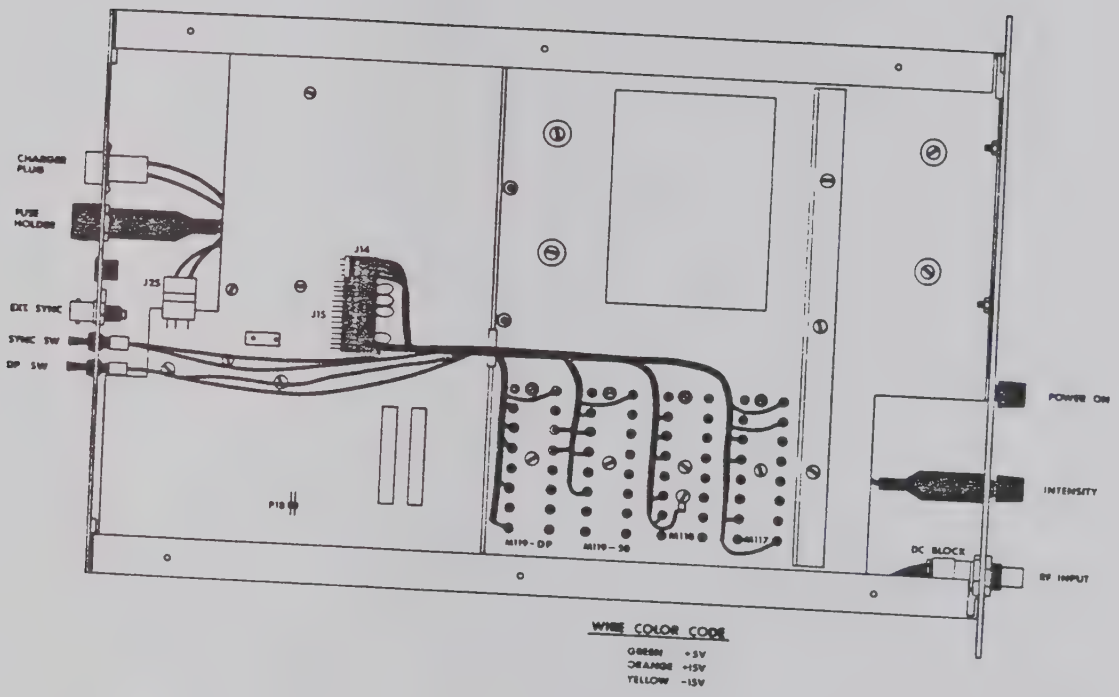

WIRE COLOR CODE

GREEN +5V
ORANGE +15V
YELLOW -15V

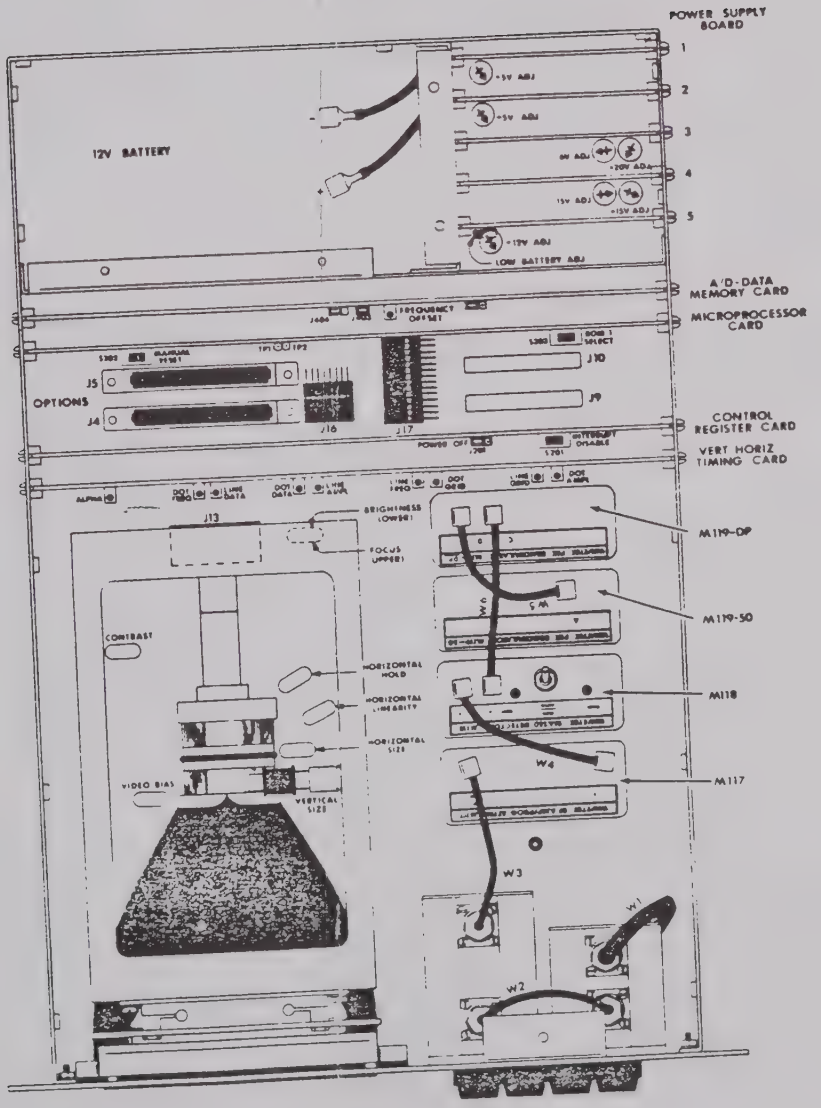
POWER SUPPLY BOARD
12V BATTERY
A/D-DATA MEMORY CARD
MICROPROCESSOR CARD
CONTROL REGISTER CARD
VERT HORIZ TIMING CARD
OPTIONS
M119-DP
M119-50
M118
M117
W1
W2
W3
W4
W5
CONTRAST
VIDEO BIAS

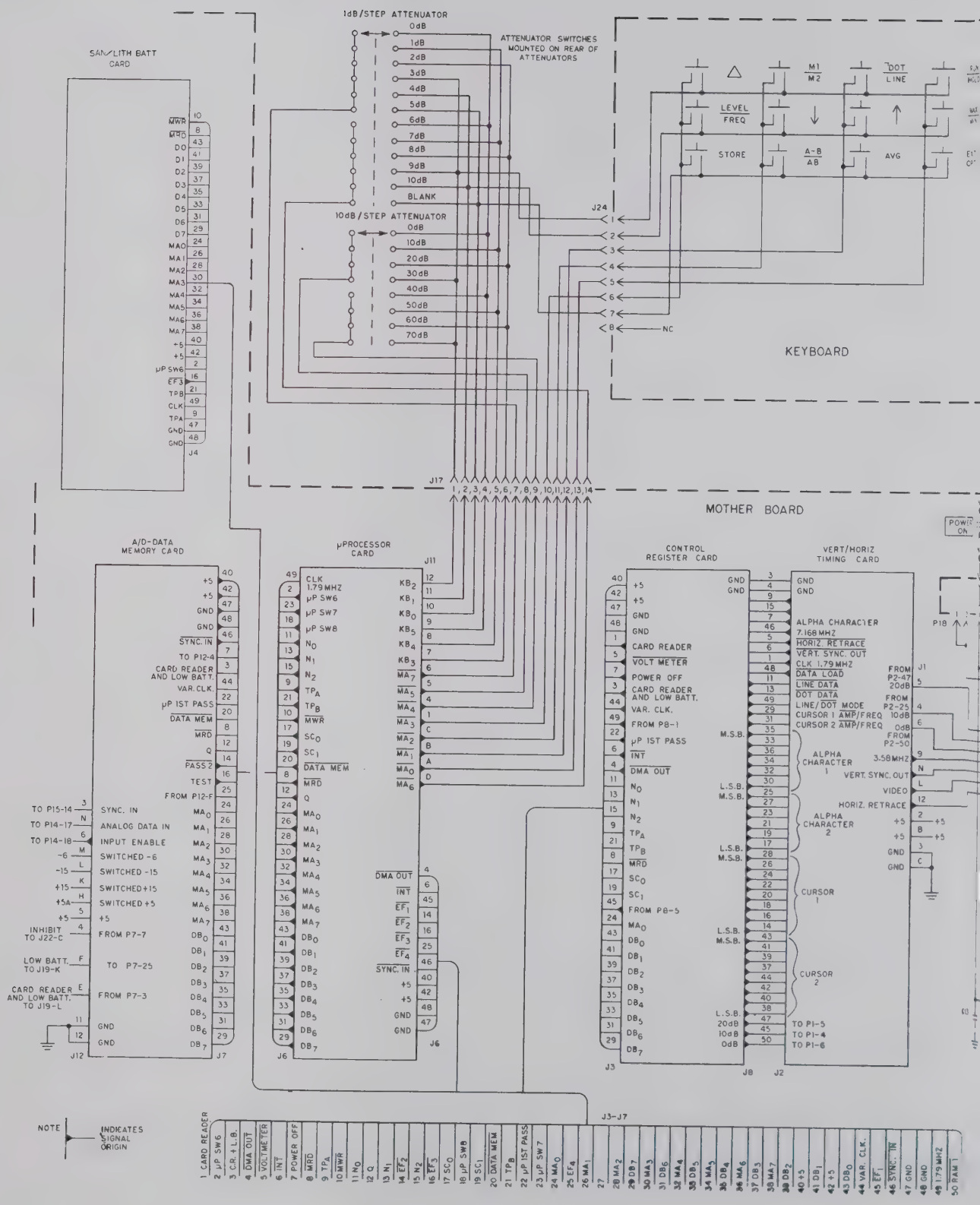

SAN/LITH BATT CARD
1dB/STEP ATTENUATOR
ATTENUATOR SWITCHES MOUNTED ON REAR OF ATTENUATORS
10dB/STEP ATTENUATOR
KEYBOARD
MOTHER BOARD
A/D-DATA MEMORY CARD
μPROCESSOR CARD
CONTROL REGISTER CARD
VERT/HORIZ TIMING CARD
NOTE
INDICATES SIGNAL ORIGIN

MODEL 1865 WIRING DIAGRAM

REV. C

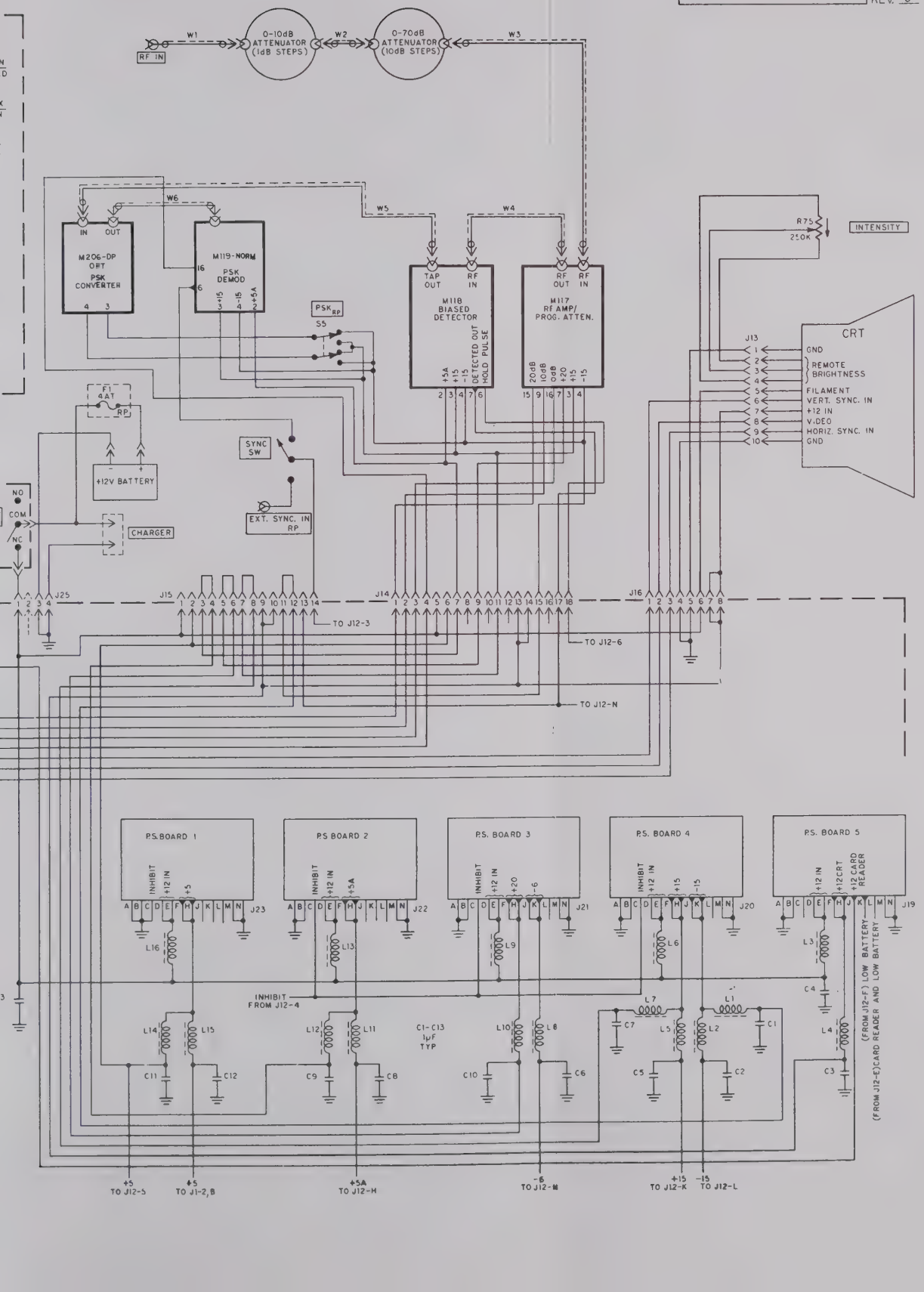

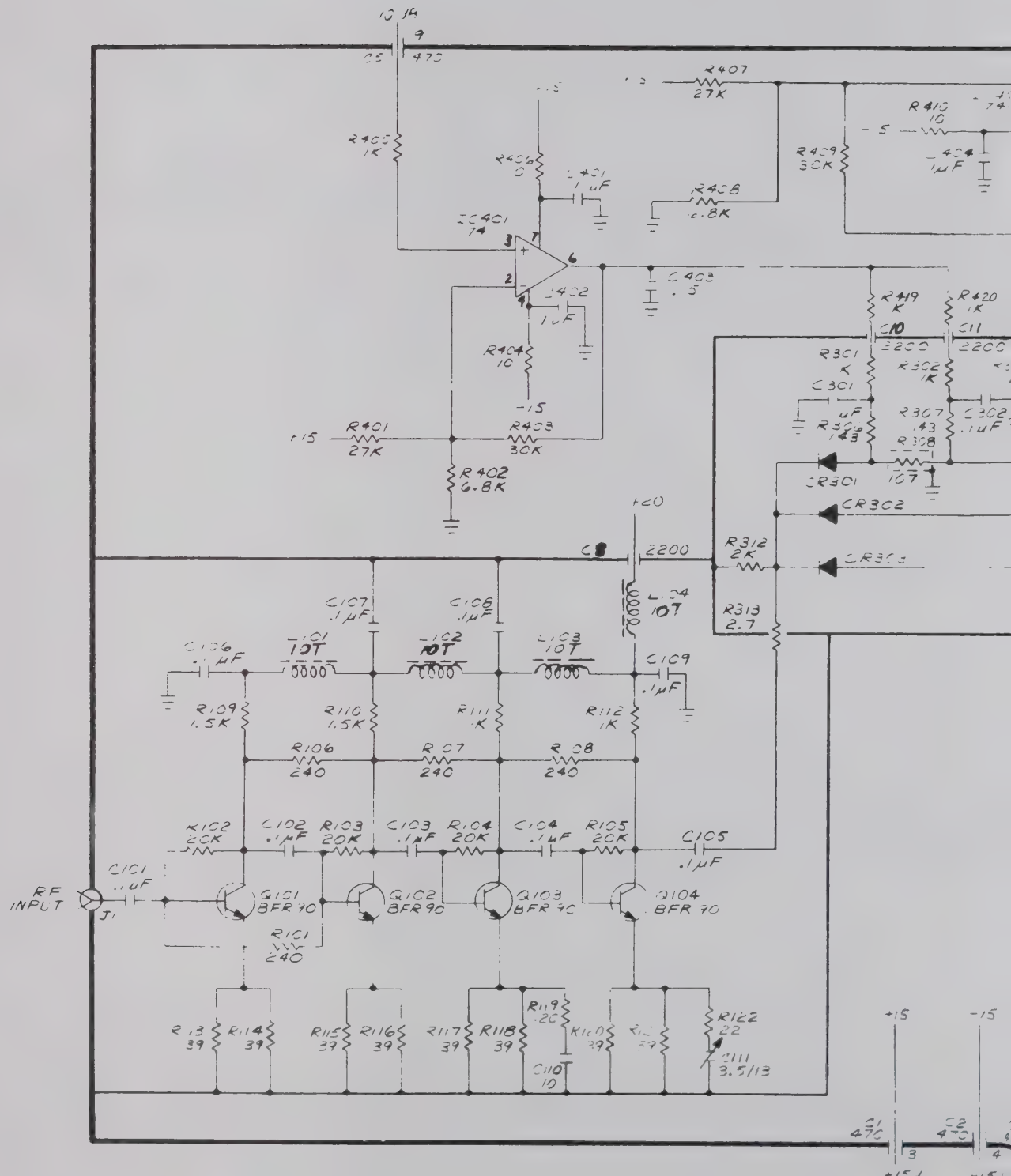
RF INPUT
J1
C101 .1μF
Q101 BFR 90
Q102 BFR 90
Q103 BFR 90
Q104 BFR 90
R101 240
R102 20K
R103 20K
R104 20K
R105 20K
C102 .1μF
C103 .1μF
C104 .1μF
C105 .1μF
R106 240
R107 240
R108 240
R109 1.5K
R110 1.5K
R111 1K
R112 1K
C106 .1μF
C107 .1μF
C108 .1μF
C109 .1μF
L101 10T
L102 10T
L103 10T
L104 10T
R113 39
R114 39
R115 39
R116 39
R117 39
R118 39
R119 220
R120 39
R121 39
R122 22
C111 3.5/13
C110 10
R312 2K
R313 2.7
C8 2200
+20
CR301
CR302
R301 1K
R302 1K
R307 143
R308 107
C301 μF
C302 .1μF
R401 27K
R402 6.8K
R403 30K
R404 10
C401 1 μF
C402 1 μF
C403 .5
IC401 74
R405 1K
R406 0
R407 27K
R408 6.8K
R409 30K
R410 10
C404 1μF
R419 1K
R420 1K
C10 2200
C11 2200
+15
-15
C1 470
C2 470
+15 V
-15 V

M117
RF AMP PROGRAMMABLE ATTENUATOR

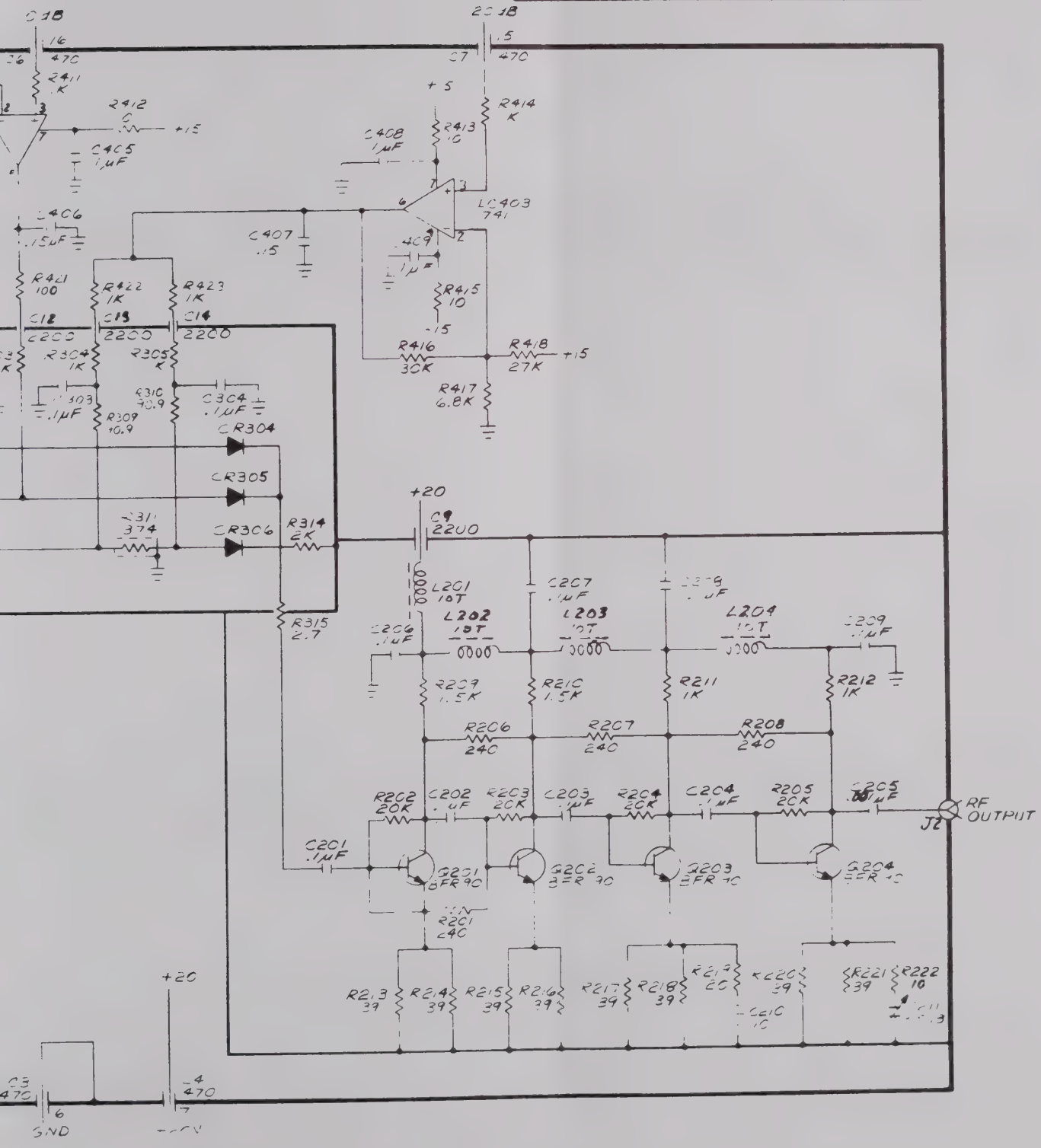

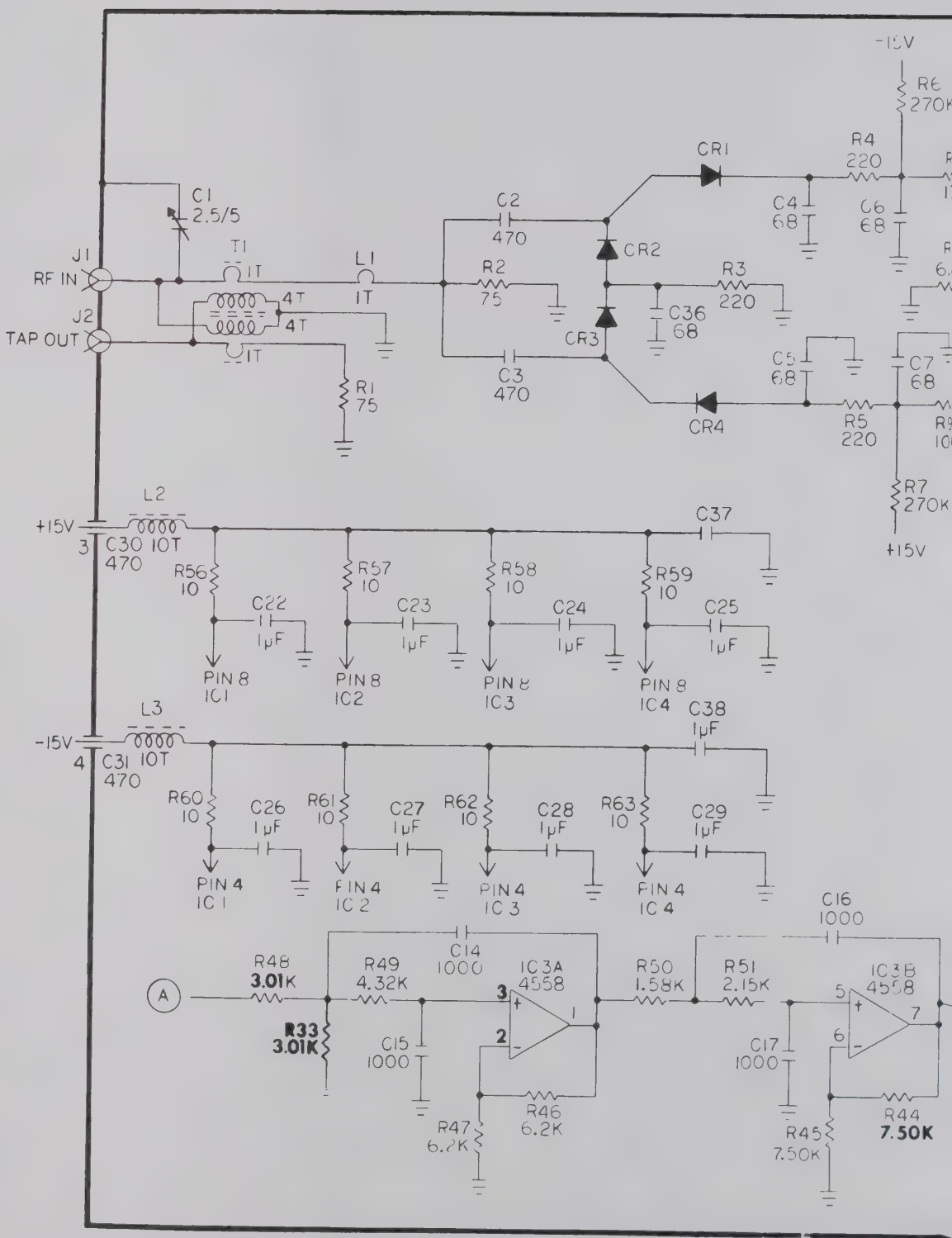
-15V
R6
270K
R4
220
CR1
C1
2.5/5
C2
470
C4
68
C6
68
J1
RF IN
T1
1T
L1
1T
R2
75
CR2
R3
220
J2
TAP OUT
4T
4T
1T
C36
68
CR3
C5
68
C7
68
C3
470
CR4
R5
220
R1
75
R7
270K
+15V
L2
+15V
3
C30 10T
470
C37
R56
10
R57
10
R58
10
R59
10
C22
1μF
C23
1μF
C24
1μF
C25
1μF
PIN 8
IC1
PIN 8
IC2
PIN 8
IC3
PIN 8
IC4
L3
-15V
4
C31 10T
470
C38
1μF
R60
10
R61
10
R62
10
R63
10
C26
1μF
C27
1μF
C28
1μF
C29
1μF
PIN 4
IC1
PIN 4
IC2
PIN 4
IC3
PIN 4
IC4
C16
1000
C14
1000
A
R48
3.01K
R49
4.32K
IC3A
4558
R50
1.58K
R51
2.15K
IC3B
4558
R33
3.01K
C15
1000
C17
1000
R46
6.2K
R47
6.2K
R45
7.50K
R44
7.50K

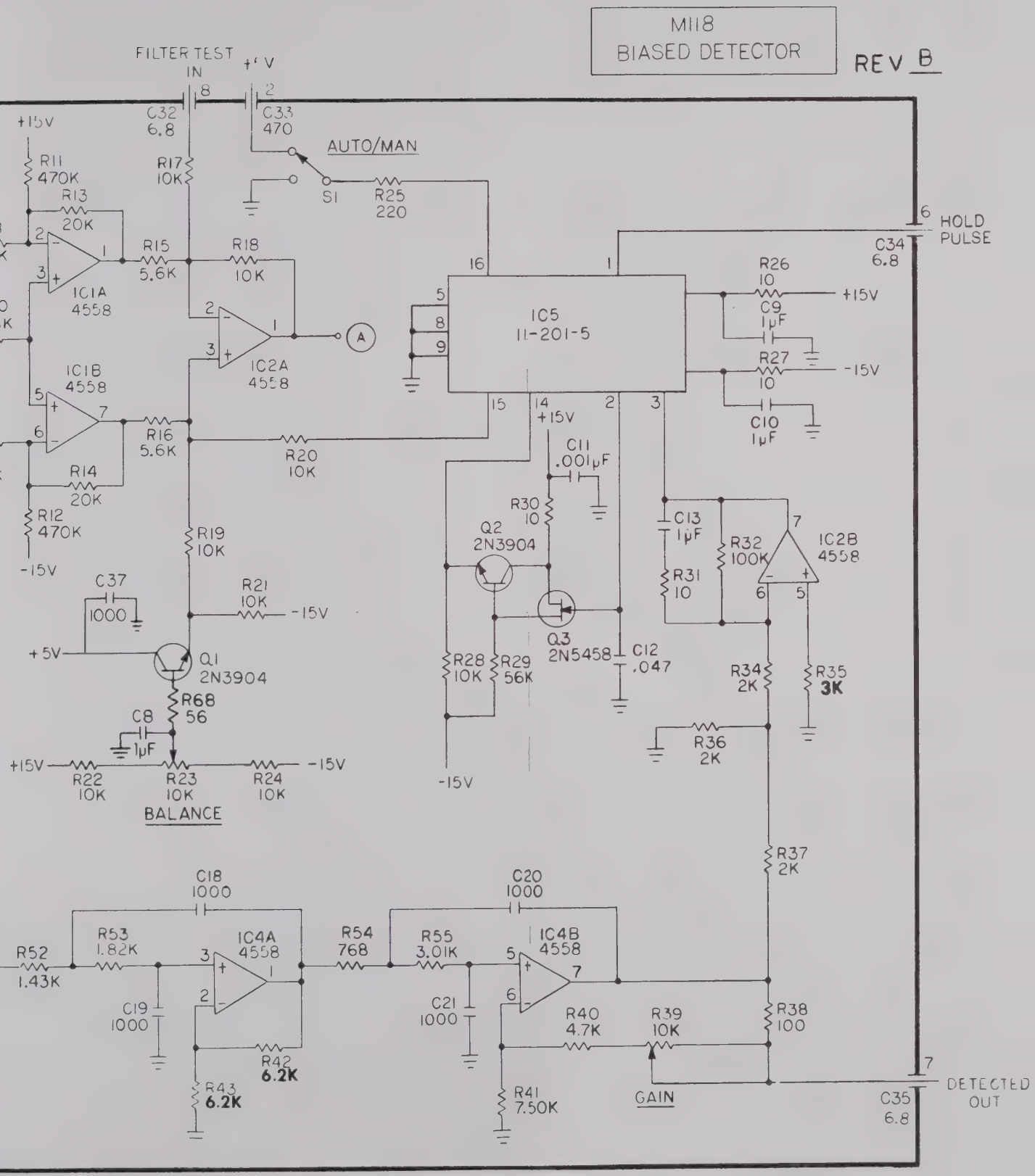
M118
BIASED DETECTOR
REV B
FILTER TEST IN
+V
C32 6.8
C33 470
AUTO/MAN
S1
R25 220
+15V
R11 470K
R13 20K
R17 10K
R15 5.6K
R18 10K
IC1A 4558
IC2A 4558
IC1B 4558
R16 5.6K
R20 10K
R14 20K
R12 470K
-15V
R19 10K
C37 1000
R21 10K
+5V
Q1 2N3904
R68 56
C8 1µF
R22 10K
R23 10K
R24 10K
BALANCE
IC5 11-201-5
R26 10
C9 1µF
R27 10
C10 1µF
C34 6.8
HOLD PULSE
C11 .001µF
R30 10
Q2 2N3904
Q3 2N5458
C12 .047
R28 10K
R29 56K
C13 1µF
R31 10
R32 100K
IC2B 4558
R34 2K
R35 3K
R36 2K
R37 2K
C18 1000
R53 1.82K
R52 1.43K
IC4A 4558
C19 1000
R42 6.2K
R43 6.2K
R54 768
C20 1000
R55 3.01K
IC4B 4558
C21 1000
R40 4.7K
R39 10K
R38 100
R41 7.50K
GAIN
C35 6.8
DETECTED OUT

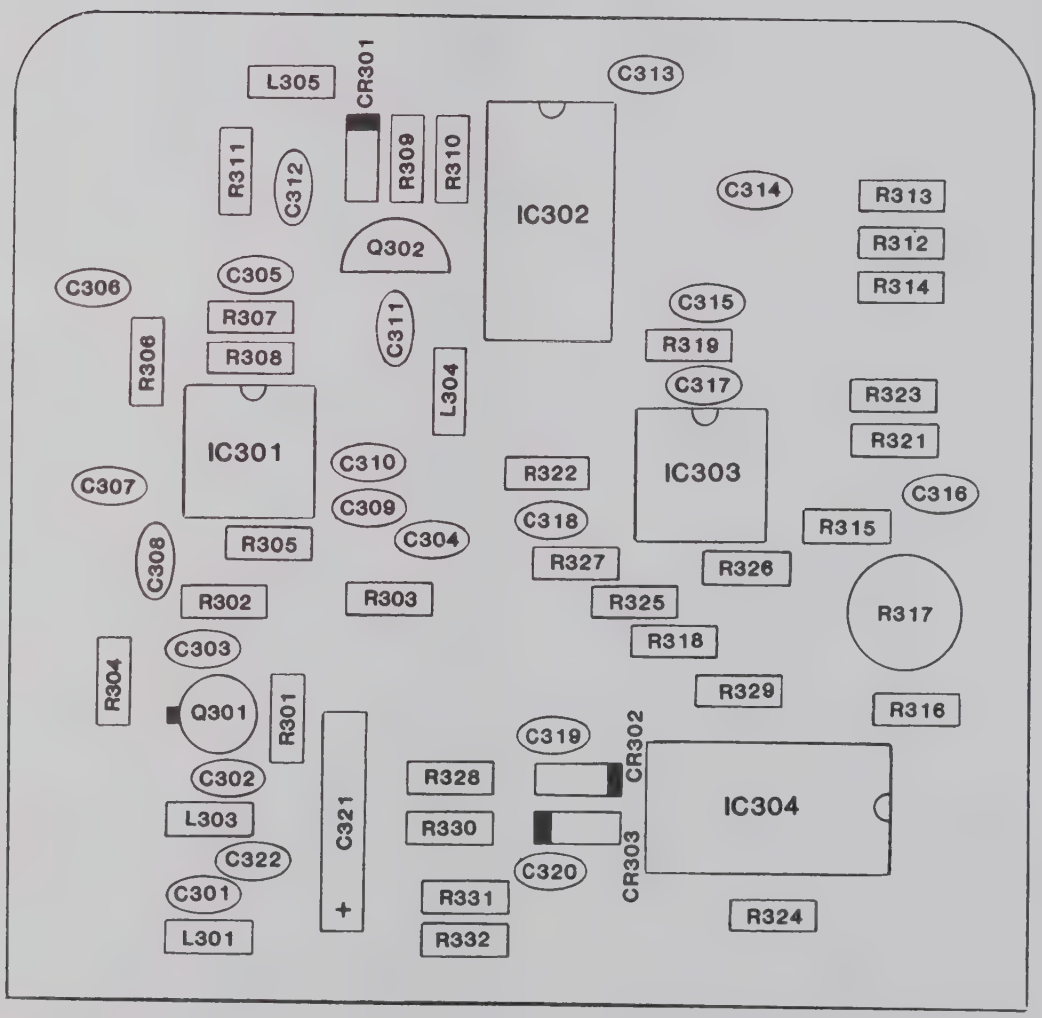
L305
CR301
C313
R311
C312
R309
R310
IC302
C314
R313
R312
R314
Q302
C306
C305
R307
C311
C315
R319
R306
R308
L304
C317
R323
IC301
IC303
R321
C310
R322
C316
C307
C309
C318
R315
C304
R305
C308
R327
R326
R302
R303
R325
R317
C303
R318
R304
Q301
R301
R329
R316
C319
CR302
C321
R328
IC304
C302
R330
L303
C322
C320
CR303
C301
R331
R324
L301
R332
+

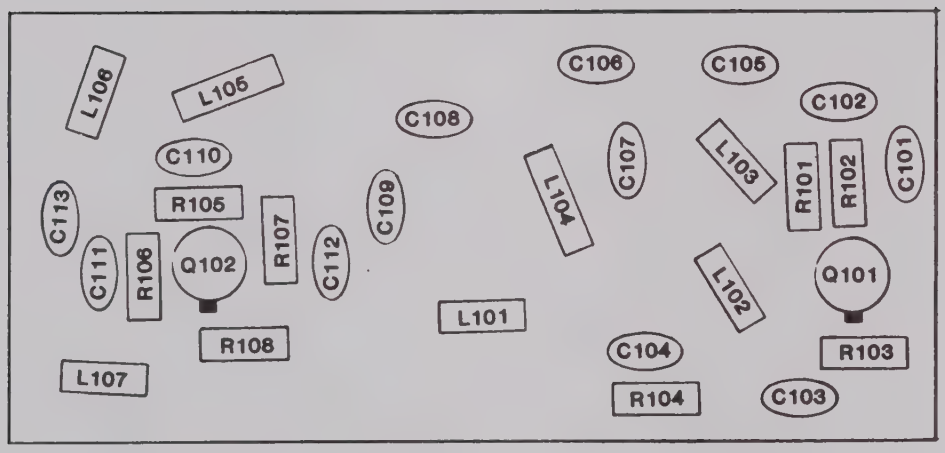

NOTE: C102 AND R101 ARE NOT USED ON M119-155

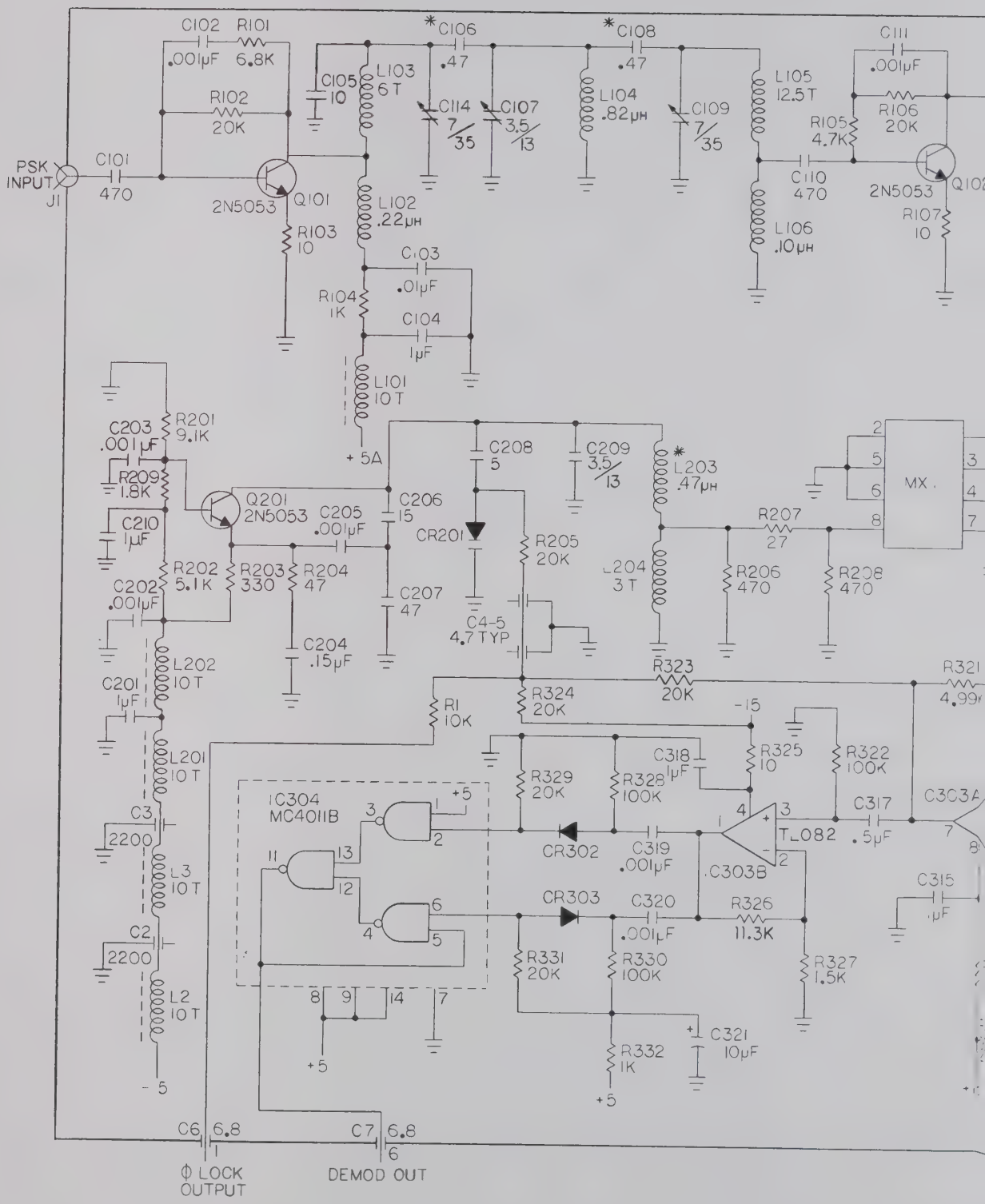
PSK INPUT J1
C101 470
C102 .001μF
R101 6.8K
R102 20K
2N5053 Q101
R103 10
C105 10
L103 6T
L102 .22μH
L101 10T
*C106 .47
C114 7/35
C107 3.5/13
*C108 .47
L104 .82μH
C109 7/35
L105 12.5T
L106 .10μH
C110 470
C111 .001μF
R105 4.7K
R106 20K
2N5053 Q102
R107 10
C103 .01μF
R104 1K
C104 1μF
+5A
C203 .001μF
R201 9.1K
R209 1.8K
C210 1μF
Q201 2N5053
C205 .001μF
C206 15
C208 5
C209 3.5/13
*L203 .47μH
CR201
R205 20K
C4-5 4.7 TYP
L204 3T
R207 27
R206 470
R208 470
MX.
R202 5.1K
R203 330
R204 47
C202 .001μF
C204 .15μF
C207 47
L202 10T
C201 1μF
R323 20K
R321 4.99K
R324 20K
R1 10K
-15
L201 10T
C3 2200
L3 10T
C2 2200
L2 10T
-5
IC304 MC4011B
R329 20K
R328 100K
C318 1μF
R325 10
R322 100K
C317 .5μF
C303A
TL082
C303B
CR302
C319 .001μF
C315 .1μF
CR303
C320 .001μF
R326 11.3K
R331 20K
R330 100K
R327 1.5K
R332 1K
C321 10μF
+5
C6 6.8
C7 6.8
Φ LOCK OUTPUT
DEMOD OUT

M119-50 PSK DEMODULATOR

REV F

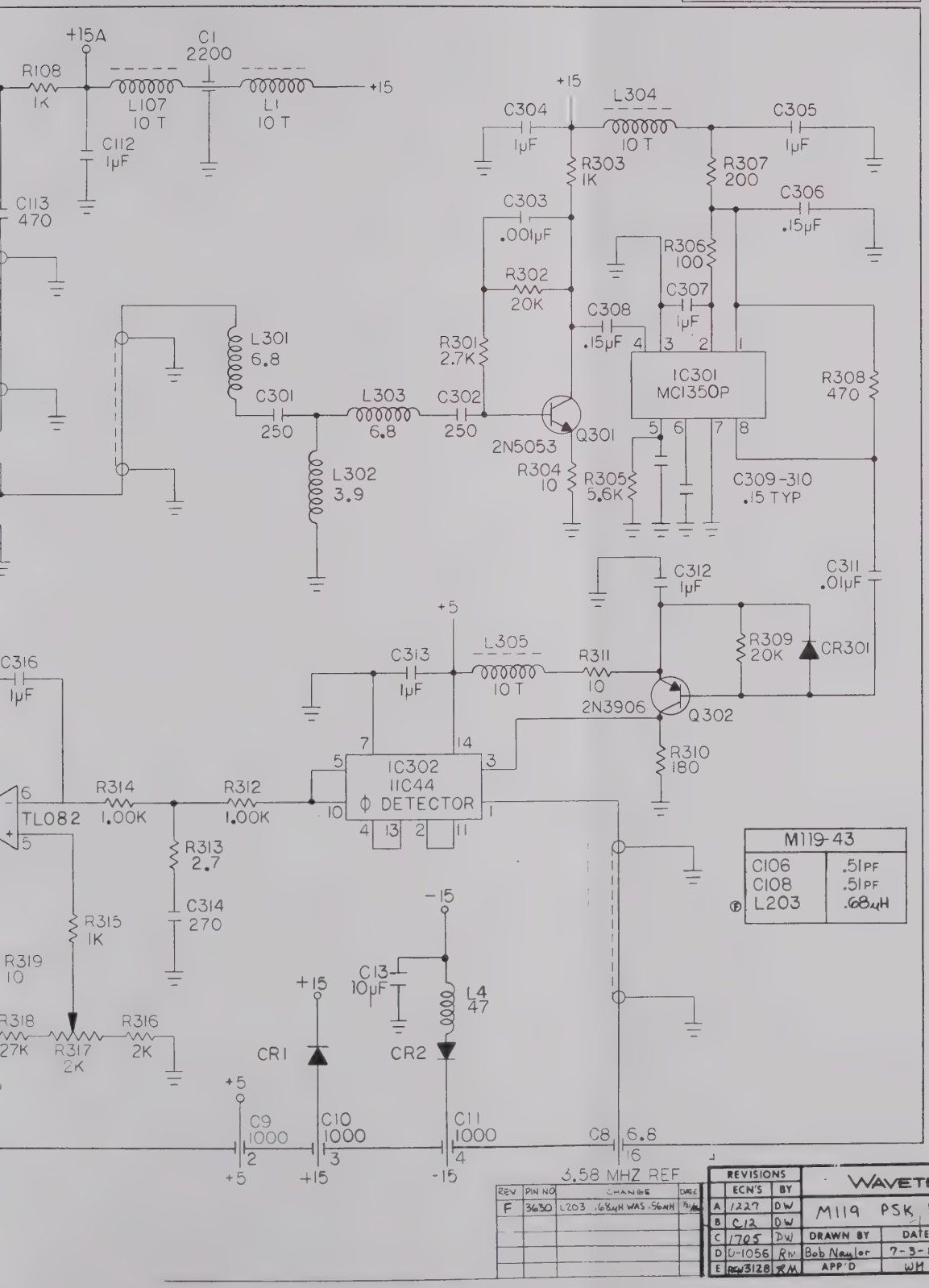

M119-43	
C106	.51PF
C108	.51PF
Ⓕ L203	.68μH

REV	PIN NO	CHANGE	DATE
F	3630	L203 .68μH WAS .56μH	7/16/80

REVISIONS		
	ECN'S	BY
A	1227	DW
B	C12	DW
C	1705	DW
D	D-1056	RW
E	REV3128	KM

WAVETEK INDIANA

M119 PSK Demodulator

DRAWN BY	DATE	NUMBER
Bob Naylor	7-3-80	0414-30-0018
APP'D	WM	

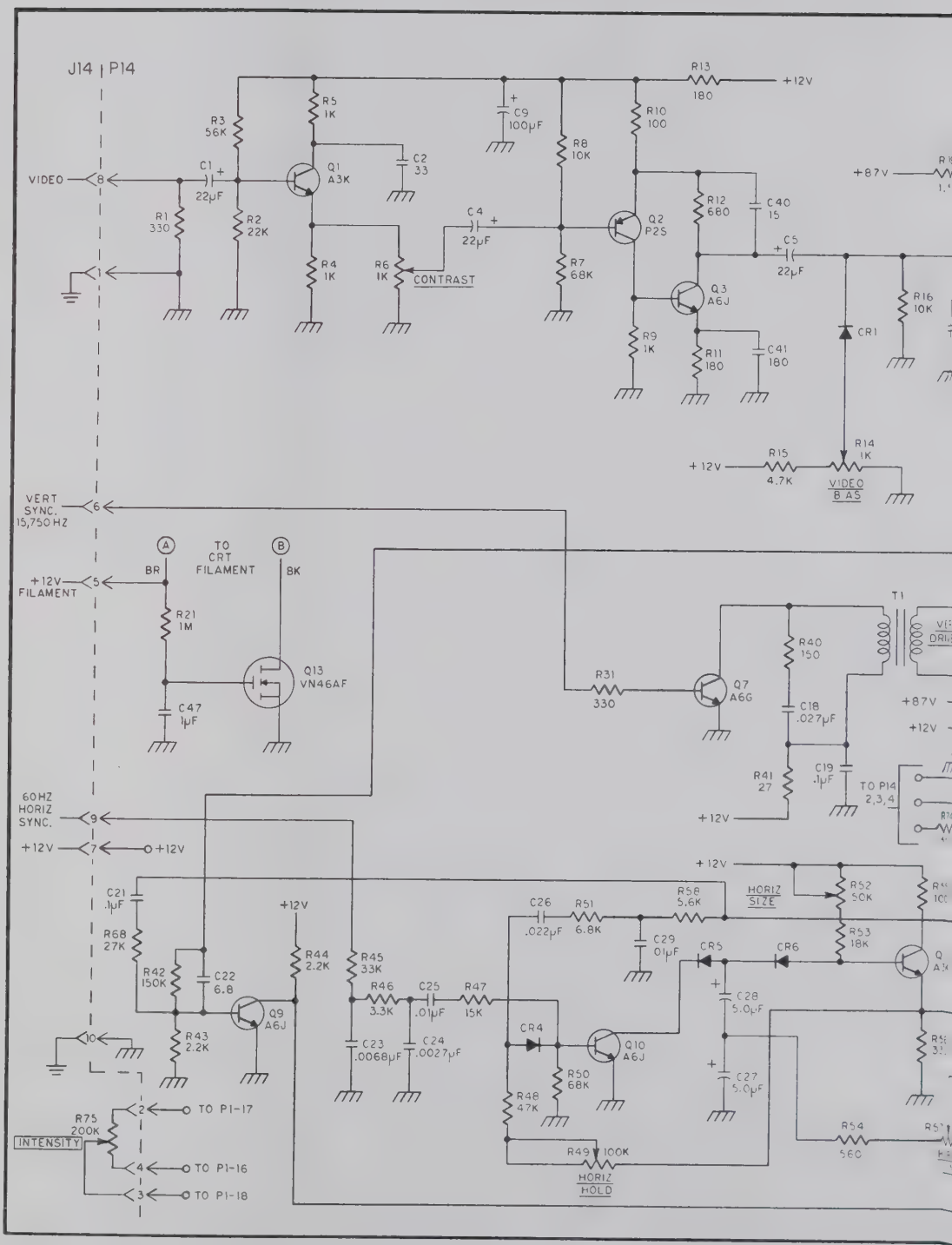
J14 | P14
VIDEO
8
1
R1 330
R2 22K
R3 56K
R5 1K
C1 22µF
Q1 A3K
C2 33
R4 1K
R6 1K CONTRAST
C4 22µF
C9 100µF
R8 10K
R7 68K
R10 100
R13 180
+12V
Q2 P2S
R12 680
C40 15
C5 22µF
Q3 A6J
R9 1K
R11 180
C41 180
CR1
R16 10K
+87V
R15 4.7K
R14 1K
VIDEO BIAS
VERT SYNC. 15,750 HZ
6
+12V FILAMENT
5
A
B
TO CRT FILAMENT
BR
BK
R21 1M
C47 1µF
Q13 VN46AF
T1
R31 330
Q7 A6G
R40 150
C18 .027µF
R41 27
C19 .1µF
TO P14 2,3,4
60HZ HORIZ SYNC.
9
+12V
7
+12V
C21 .1µF
R68 27K
R42 150K
C22 6.8
R43 2.2K
Q9 A6J
R44 2.2K
R45 33K
R46 3.3K
C25 .01µF
R47 15K
C23 .0068µF
C24 .0027µF
C26 .022µF
R51 6.8K
R58 5.6K
C29 01µF
HORIZ SIZE
R52 50K
R53 18K
CR5
CR6
C28 5.0µF
C27 5.0µF
CR4
Q10 A6J
R50 68K
R48 47K
R49 100K
HORIZ HOLD
R54 560
10
2
TO P1-17
4
TO P1-16
3
TO P1-18
R75 200K
INTENSITY

MODEL 1865
CRT ASSEMBLY

REV B

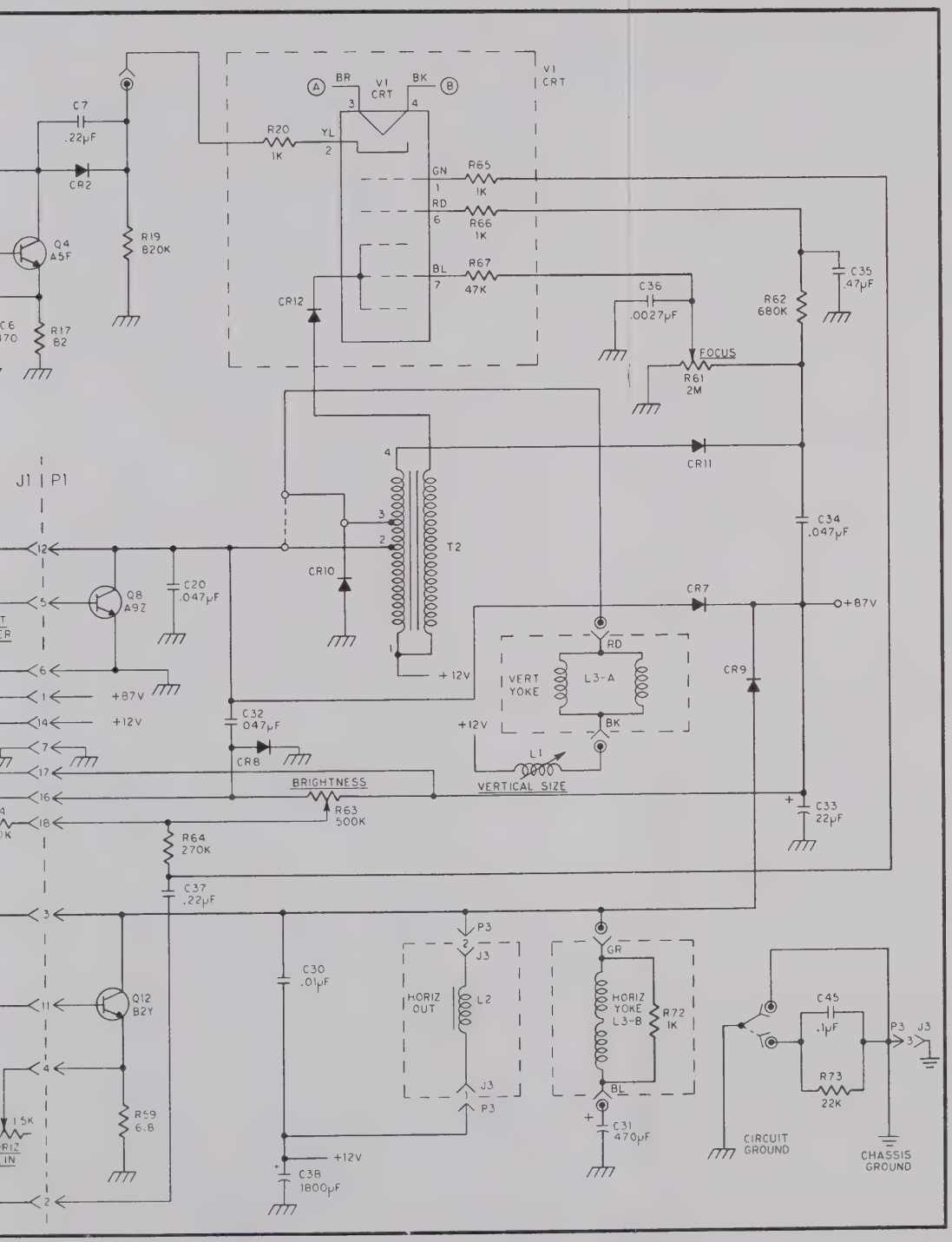

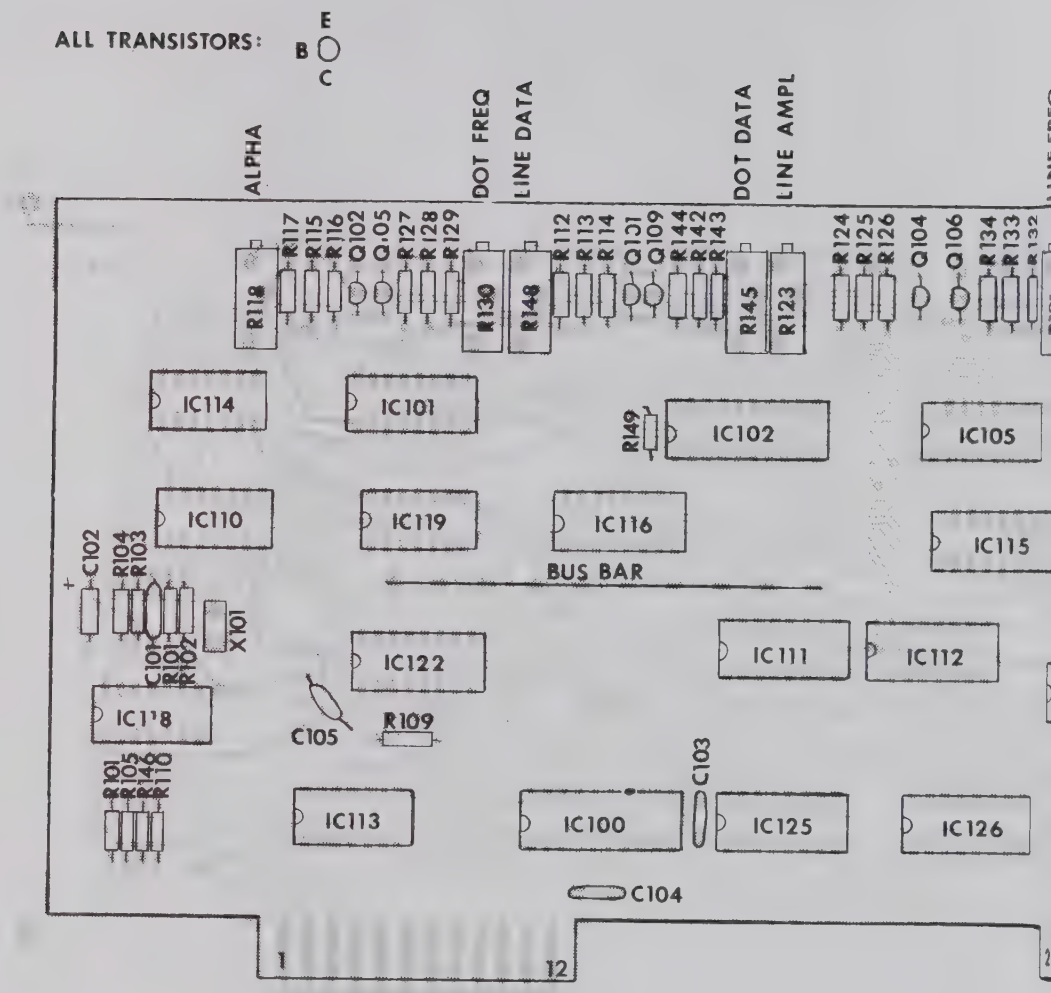
ALL TRANSISTORS:
E
B
C
ALPHA
DOT FREQ
LINE DATA
DOT DATA
LINE AMPL
R118
R117
R115
R116
Q102
Q.05
R127
R128
R129
R130
R148
R112
R113
R114
Q131
Q109
R144
R142
R143
R145
R123
R124
R125
R126
Q104
Q106
R134
R133
IC114
IC101
R149
IC102
IC105
IC110
IC119
IC116
IC115
BUS BAR
C102
R104
R103
C101
R102
X101
IC122
IC111
IC112
IC118
C105
R109
C103
R101
R105
R146
R110
IC113
IC100
IC125
IC126
C104
1
12

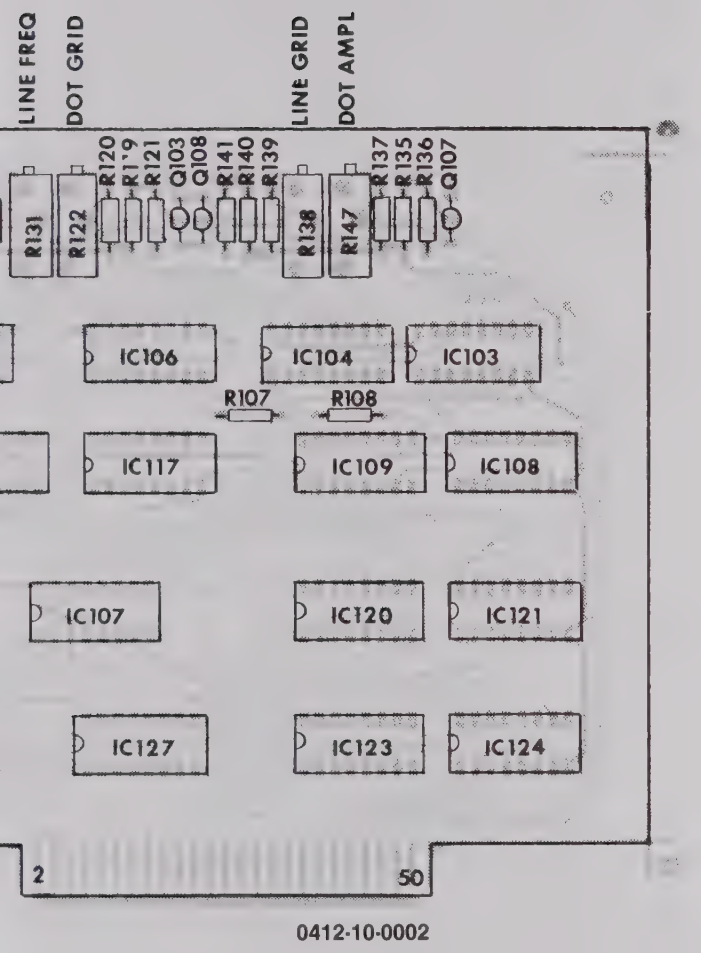
LINE FREQ
DOT GRID
LINE GRID
DOT AMPL
R131
R122
R120
R119
R121
Q103
Q108
R141
R140
R139
R138
R147
R137
R135
R136
Q107
IC106
IC104
IC103
R107
R108
IC117
IC109
IC108
IC107
IC120
IC121
IC127
IC123
IC124
2
50

0412-10-0002

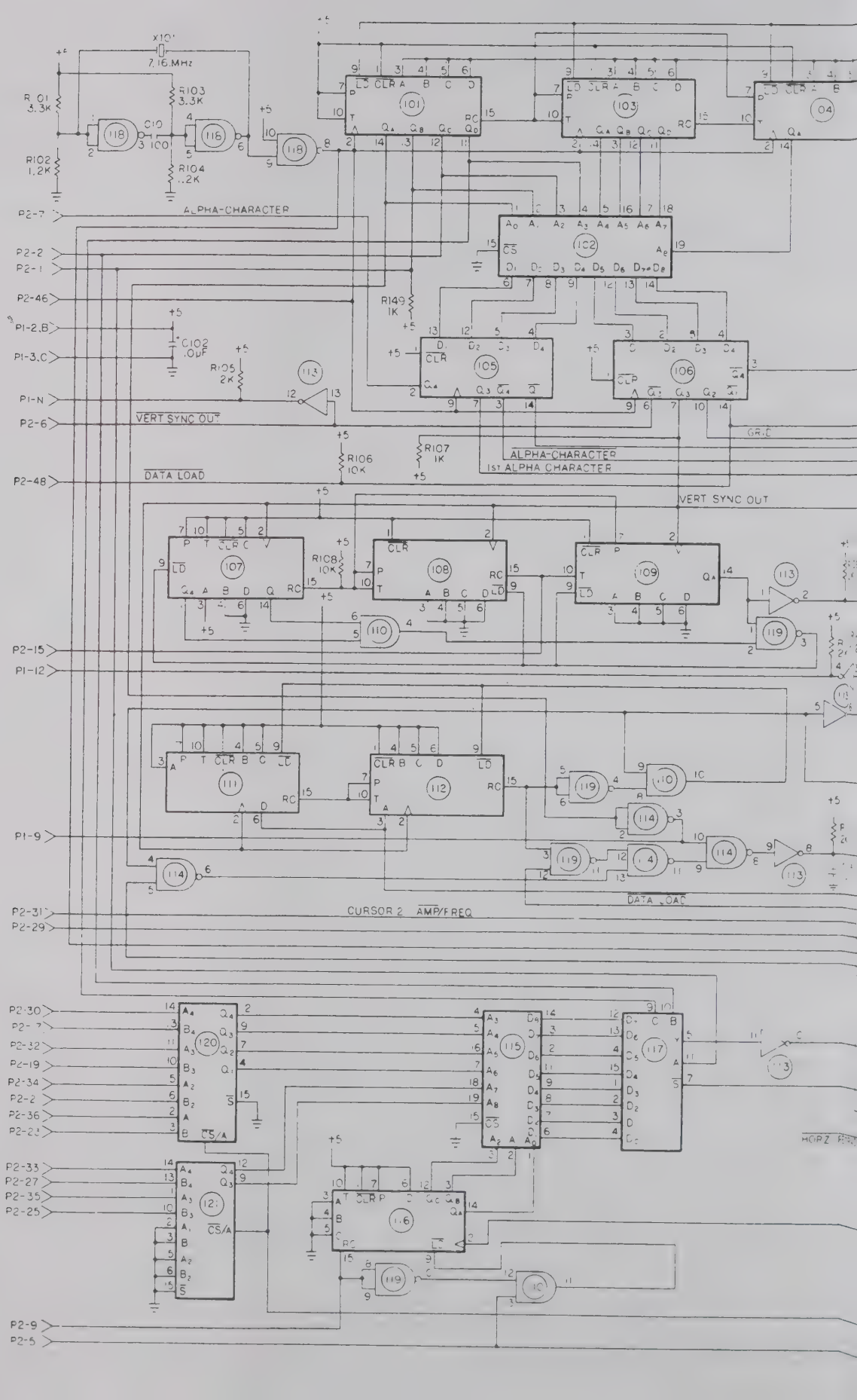
X10
7.16 MHz
R101 3.3K
R102 1.2K
R103 3.3K
R104 1.2K
C10 100
ALPHA-CHARACTER
P2-7
P2-2
P2-1
P2-46
P1-2,B
P1-3,C
P1-N
P2-6
VERT SYNC OUT
P2-48
DATA LOAD
C102 .01uF
R105 2K
R106 10K
R107 1K
R108 10K
R149 1K
1ST ALPHA CHARACTER
P2-15
P1-12
P1-9
P2-31
P2-29
CURSOR 2 AMP/FREQ
P2-30
P2-7
P2-32
P2-19
P2-34
P2-2
P2-36
P2-23
P2-33
P2-27
P2-35
P2-25
P2-9
P2-5
HORZ

CATV SWEEP RECOVERY SYSTEM
MODEL 1865
VERT/HORIZ TIMING CARD
REV C

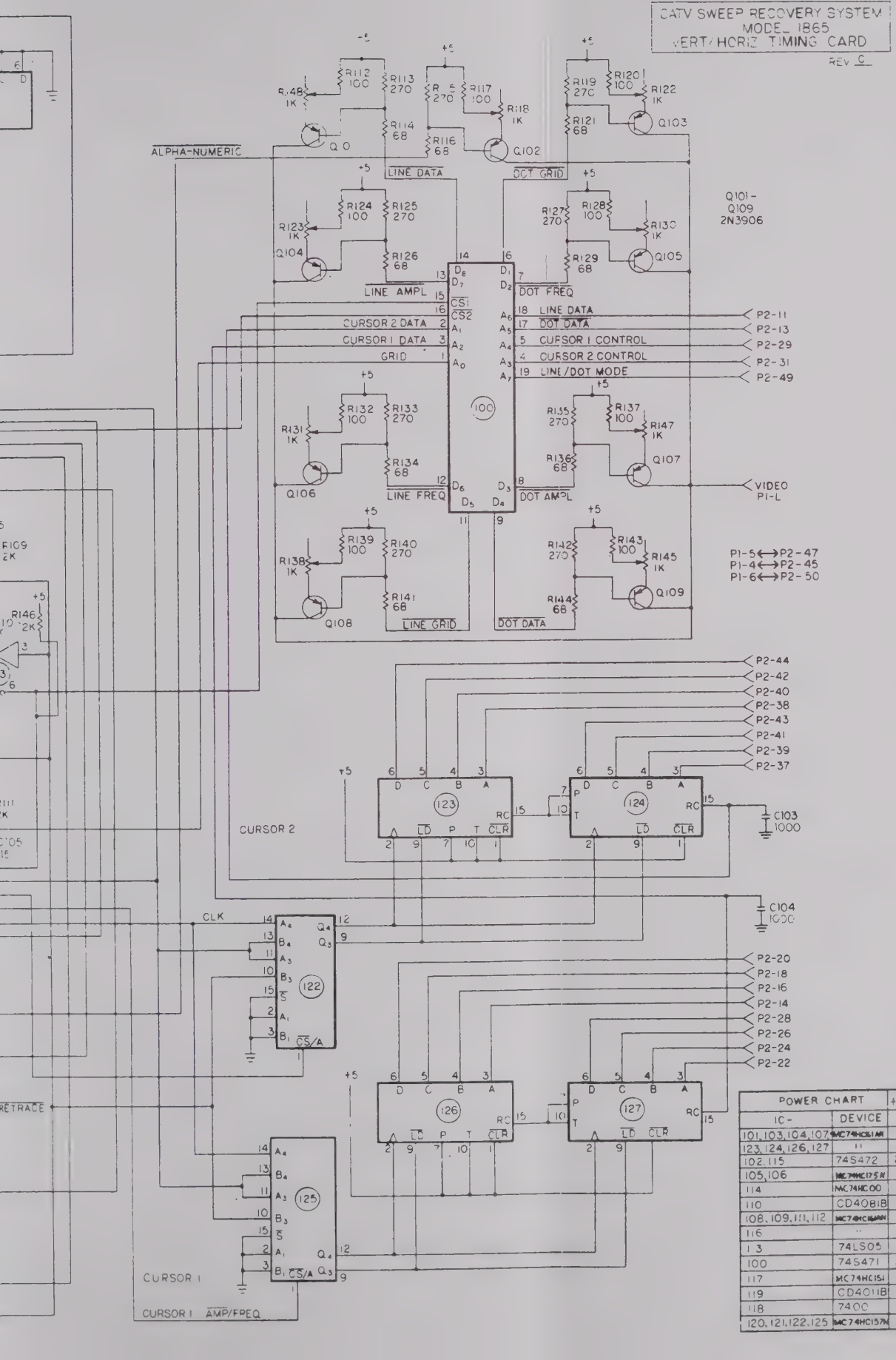

POWER CHART		+5V	GND
IC -	DEVICE		
101, 103, 104, 107	MC74HC51AN	16	8
123, 124, 126, 127	"	16	8
102, 115	74S472	20	10
105, 106	MC74HC175N	16	8
114	MC74HC00	14	7
110	CD4081B	14	7
108, 109, 111, 112	MC74HC86AN	16	8
116	"	"	"
113	74LS05	14	7
100	74S471	20	10
117	MC74HC151	16	8
119	CD4011B	14	7
118	7400	14	7
120, 121, 122, 125	MC74HC157N	16	8

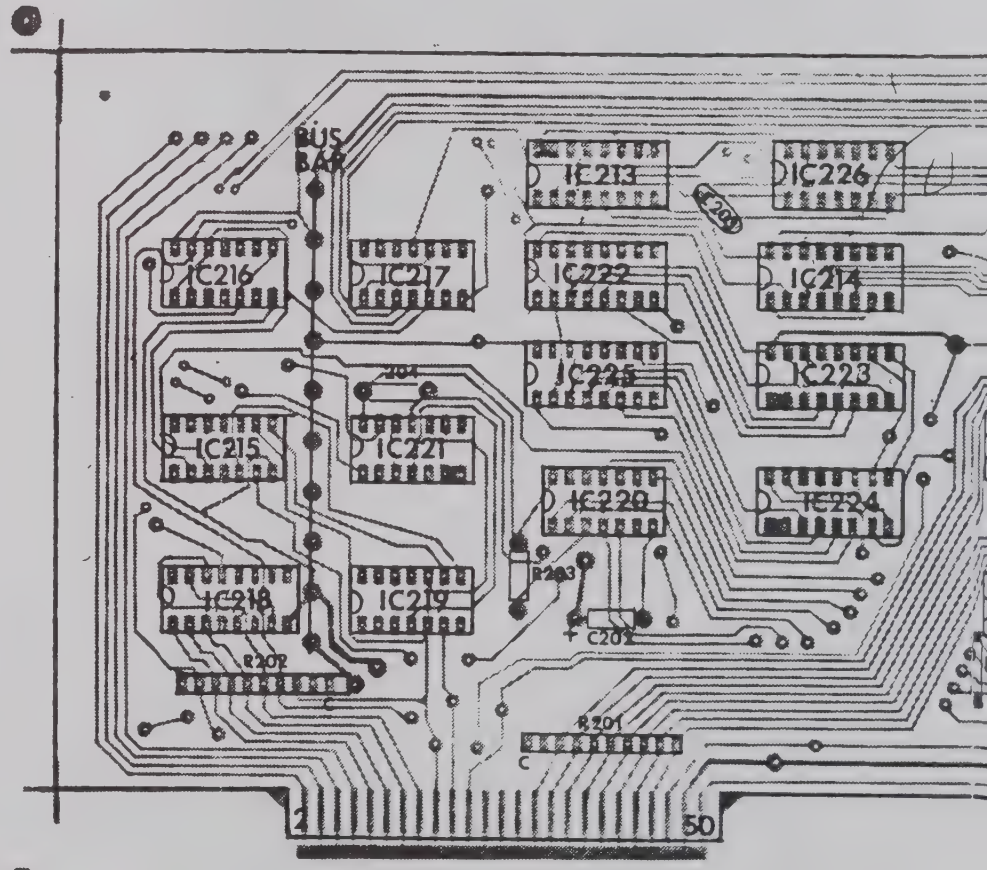

NEXT ASSY	USED ON
APPLICATION	

"This document contains information proprietary to Wavetek. The information in this document is not to be used or duplicated in any manner without the prior approval in writing of Wavetek."

REVISIONS				
ZONE	LTR	DESCRIPTION	DATE	APPROVED

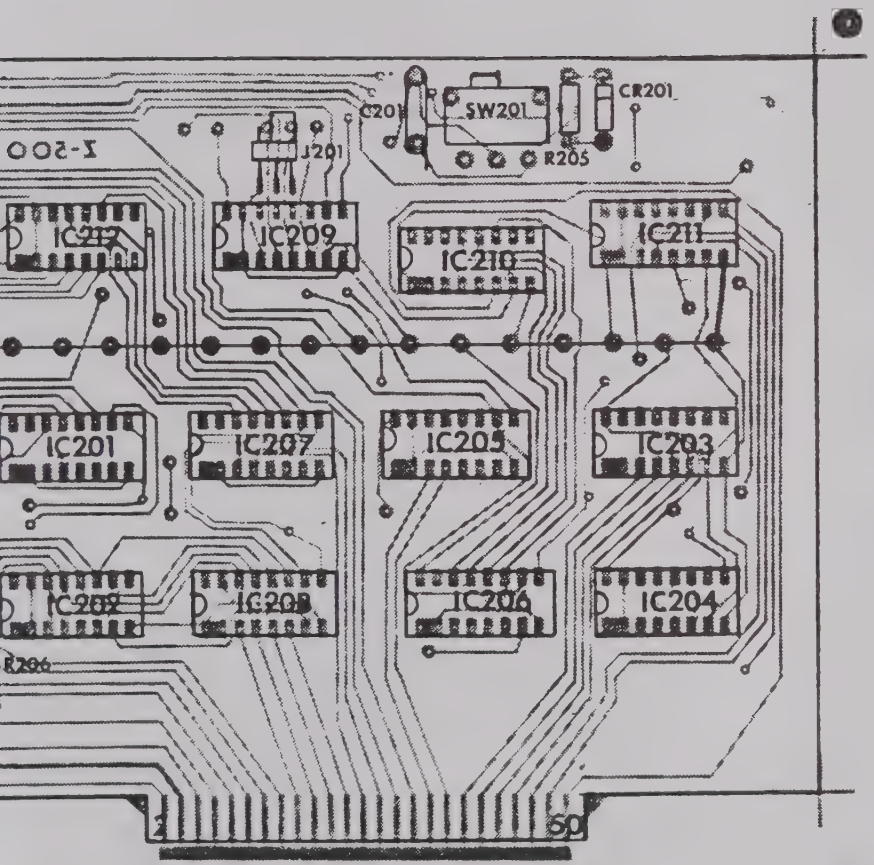

UNLESS OTHERWISE SPECIFIED DIMENSIONS ARE IN INCHES TOLERANCES ARE: FRACTIONS DECIMALS ANGLES ± .XX ± ± .XXX ±	CONTRACT NO.	WAVETEK INDIANA, INC.
	APPROVALS / DATE	CONTROL REGISTER CARD PARTS LAYOUT
MATERIAL	DRAWN DW	
	CHECKED	
FINISH	REDRAWN TJM 6/28/83	SIZE B · CODE IDENT NO. 34280 · DRAWING NO. 0412-10-0004
DO NOT SCALE DRAWING		SCALE · SHEET OF

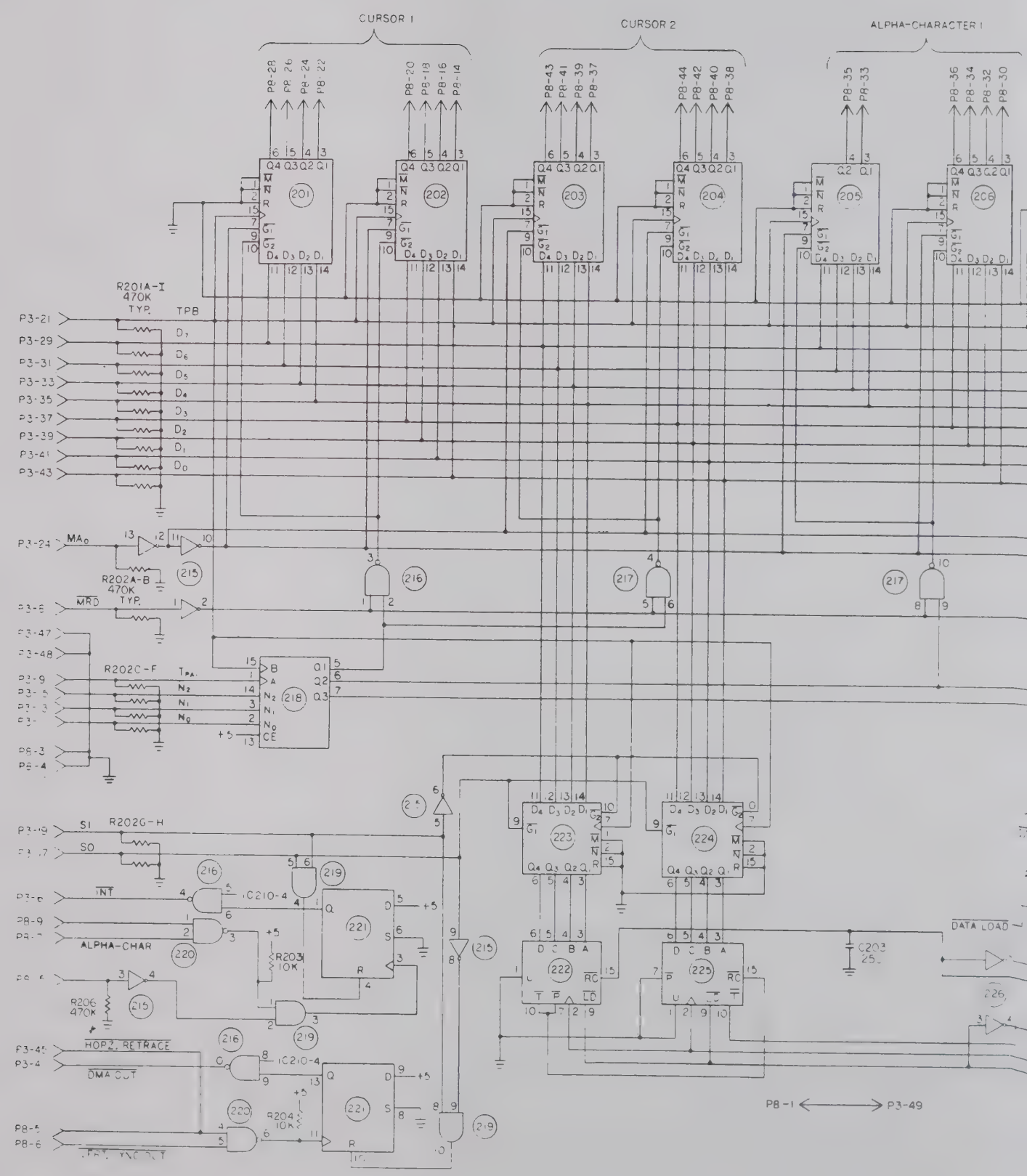
CURSOR 1
CURSOR 2
ALPHA-CHARACTER 1
P8-28
P8-26
P8-24
P8-22
P8-20
P8-18
P8-16
P8-14
P8-43
P8-41
P8-39
P8-37
P8-44
P8-42
P8-40
P8-38
P8-35
P8-33
P8-36
P8-34
P8-32
P8-30
201
202
203
204
205
206
R201A-I
470K
TYP.
TPB
P3-21
P3-29
P3-31
P3-33
P3-35
P3-37
P3-39
P3-41
P3-43
P3-24
MA0
R202A-B
470K
TYP.
MRD
215
216
217
218
R202C-F
P3-47
P3-48
P3-9
P8-3
P8-4
R202G-H
SI
SO
INT
ALPHA-CHAR
R206
470K
HORZ. RETRACE
DMA OUT
P3-45
P3-4
P8-5
P8-6
IC210-4
R203
10K
R204
10K
219
220
221
223
224
222
225
C203
DATA LOAD
226
P8-1
P3-49

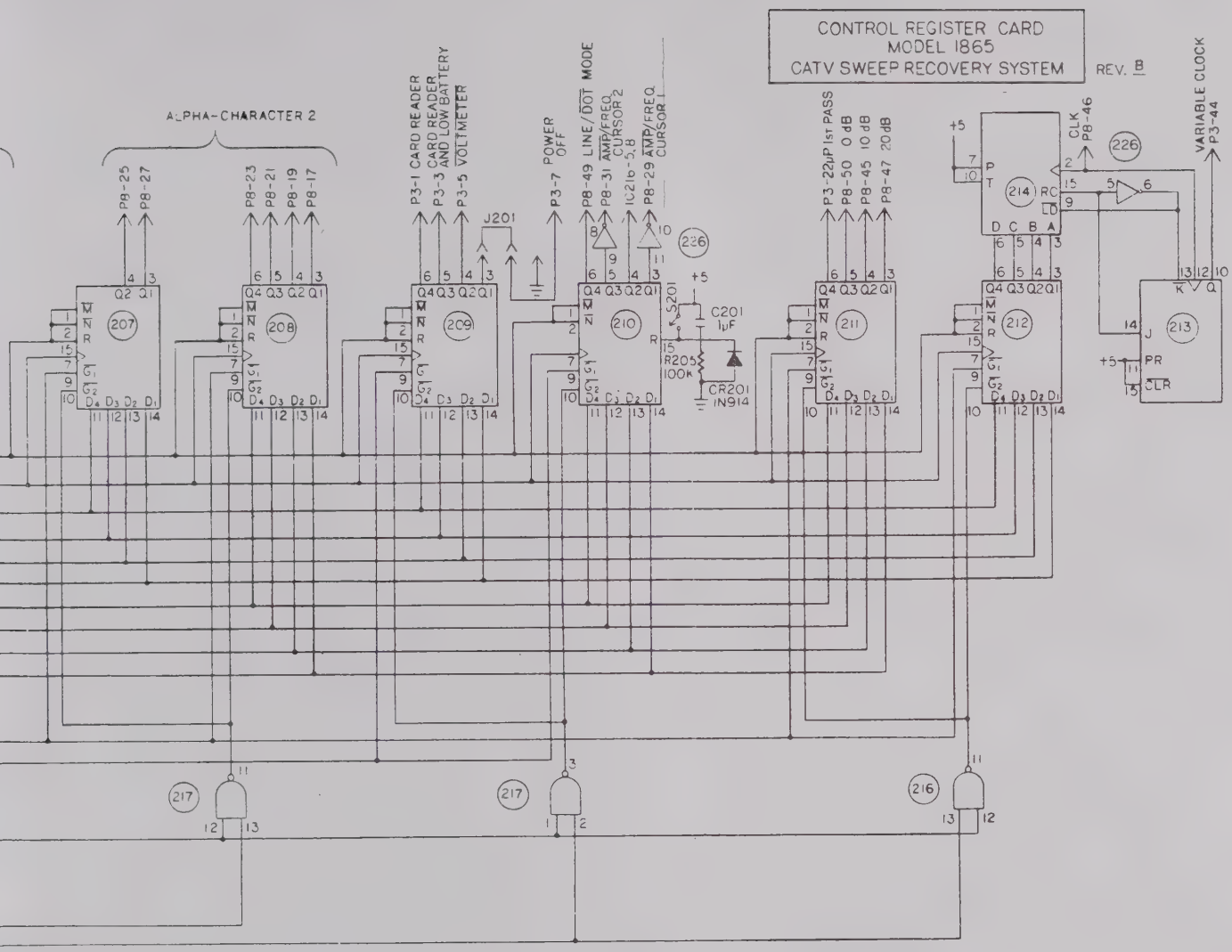

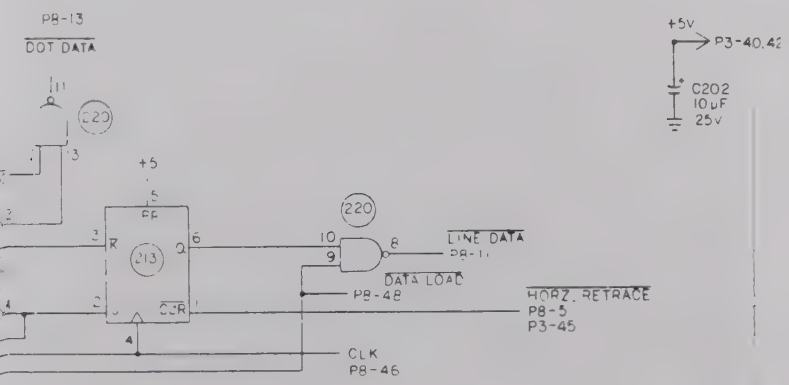

POWER CHART			
IC -	DEVICE	+5V	GND
201, 202, 203,	CD4076B	16	8
204 205,206,	"	16	8
207 208,209,	"	16	8
210, 211, 212,	"	16	8
223, 224	"	16	8
213	MC74HC109	16	8
214	MC74HC161	16	8
215	MC14069UB	14	7
216, 217	CD4011B	14	7
218	CDP1853CD	16	8
219	CD4081B	14	7
220	MC74HC00	14	7
221	CD4013B	14	7
222, 225	74LS169	16	8
226	MC74HC04	14	7

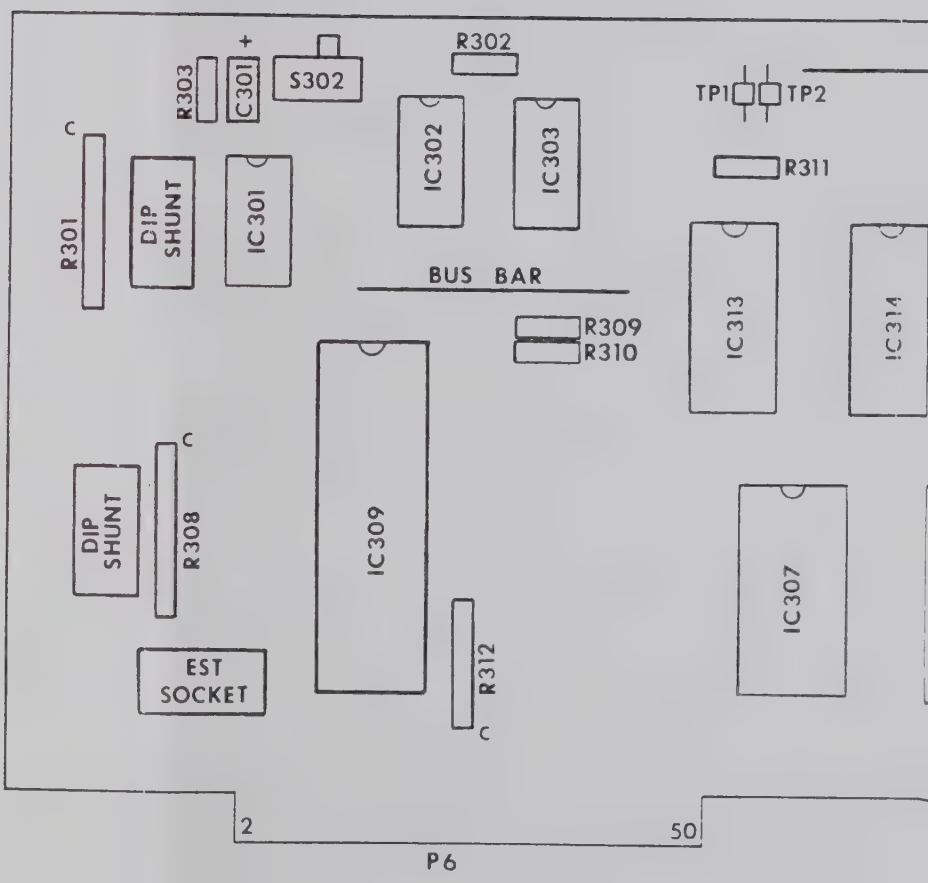

NOTE: IC307 & 308 NOT INSTALLED
WHEN IC315 IS USED.

BUS BAR
IC310
IC311
IC312
IC316
IC317
IC305
R304
R305
306
IC308
IC315
IC304
IC318
R316
C302
+
R306
R307
C
C
1
12
A
P11
N
Z501A

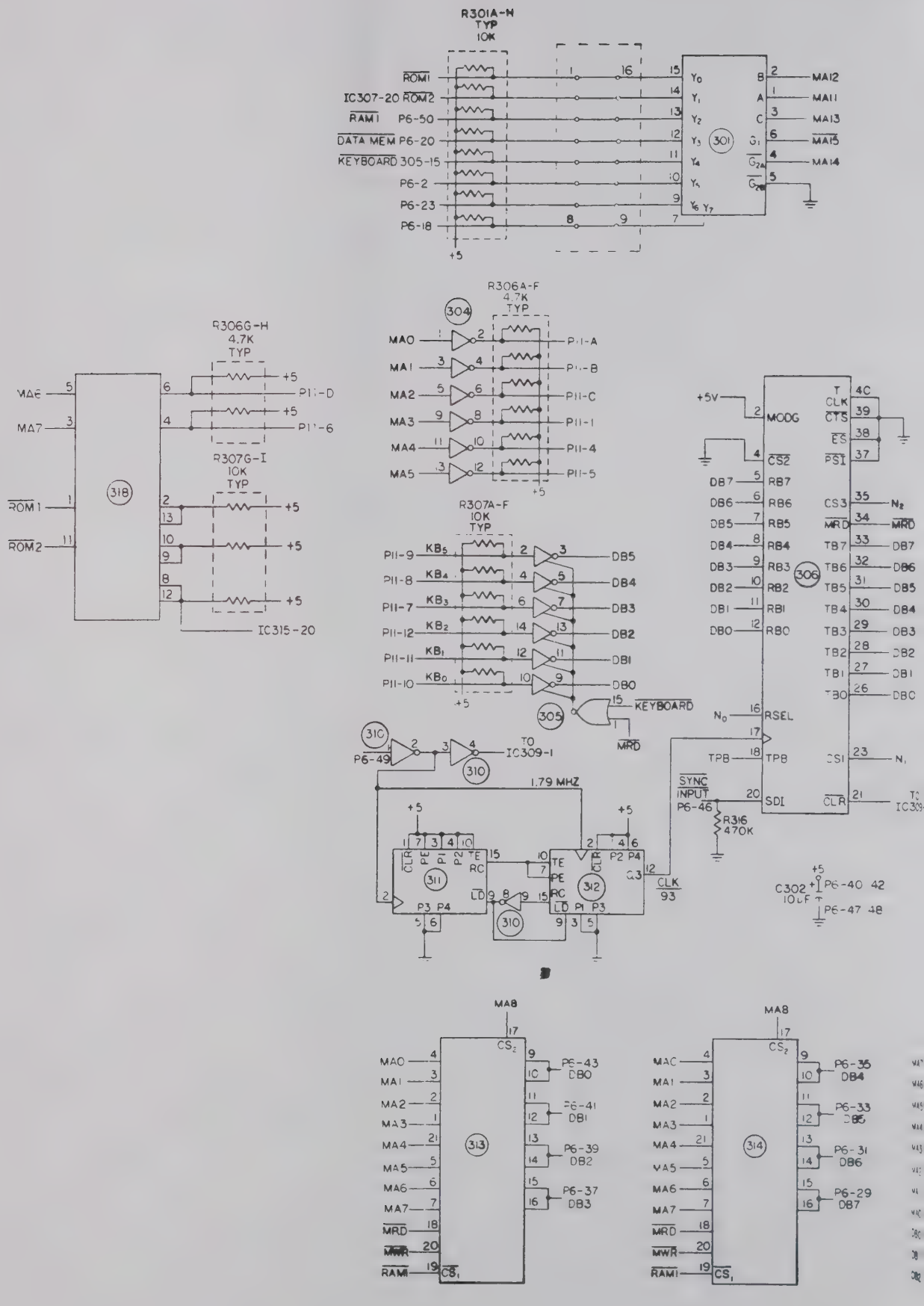
R301A-H
TYP
10K
ROM1
IC307-20 ROM2
RAM1 P6-50
DATA MEM P6-20
KEYBOARD 305-15
P6-2
P6-23
P6-18
+5
301
MA12
MA11
MA13
MA15
MA14
R306A-F
4.7K
TYP
304
MA0
MA1
MA2
MA3
MA4
MA5
P11-A
P11-B
P11-C
P11-1
P11-4
P11-5
R306G-H
4.7K
TYP
MA6
MA7
P11-D
P11-6
R307G-I
10K
TYP
318
ROM1
ROM2
IC315-20
R307A-F
10K
TYP
P11-9
P11-8
P11-7
P11-12
P11-11
P11-10
KB5
KB4
KB3
KB2
KB1
KB0
DB5
DB4
DB3
DB2
DB1
DB0
305
KEYBOARD
MRD
310
P6-49
TO
IC309-1
1.79 MHZ
311
312
CLK
93
+5V
MODG
CS2
RB7
RB6
RB5
RB4
RB3
RB2
RB1
RB0
RSEL
TPB
SDI
306
CLK
CTS
ES
PSI
CS3
MRD
TB7
TB6
TB5
TB4
TB3
TB2
TB1
TB0
N2
N1
SYNC
INPUT
P6-46
R316
470K
C302
10uF
P6-40 42
P6-47 48
MA8
313
MA0
MA1
MA2
MA3
MA4
MA5
MA6
MA7
MRD
MWR
RAM1
CS1
P6-43
DB0
P6-41
DB1
P6-39
DB2
P6-37
DB3
314
P6-35
DB4
P6-33
DB5
P6-31
DB6
P6-29
DB7

MODEL 1865
MICROPROCESSOR CARD REV. A

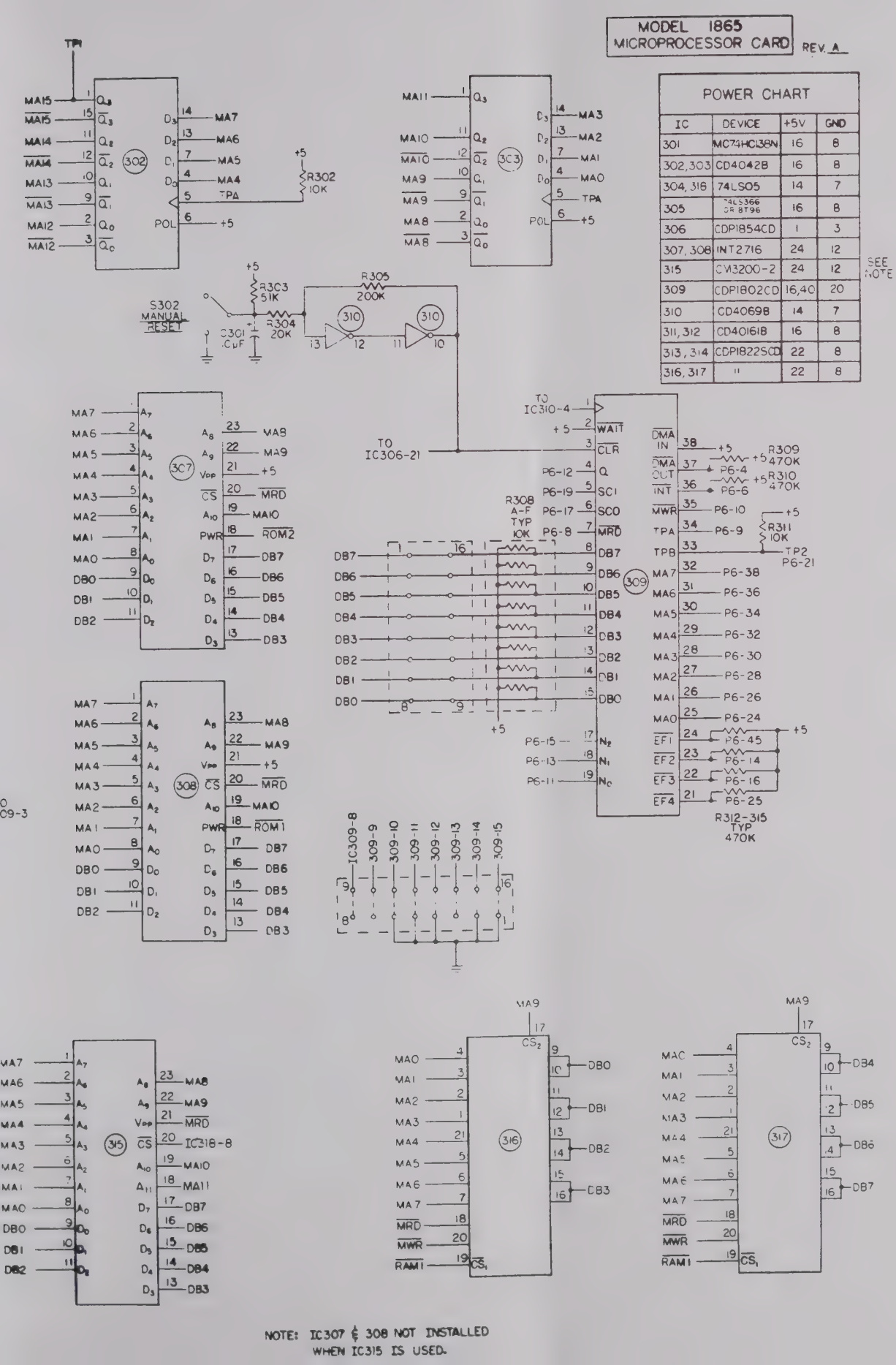

POWER CHART			
IC	DEVICE	+5V	GND
301	MC74HC138N	16	8
302,303	CD4042B	16	8
304, 318	74LS05	14	7
305	74LS366 OR 8T96	16	8
306	CDP1854CD	1	3
307, 308	INT2716	24	12
315	CM3200-2	24	12
309	CDP1802CD	16,40	20
310	CD40698	14	7
311, 312	CD401618	16	8
313, 314	CDP1822SCD	22	8
316, 317	"	22	8

SEE NOTE

NOTE: IC307 & 308 NOT INSTALLED WHEN IC315 IS USED.

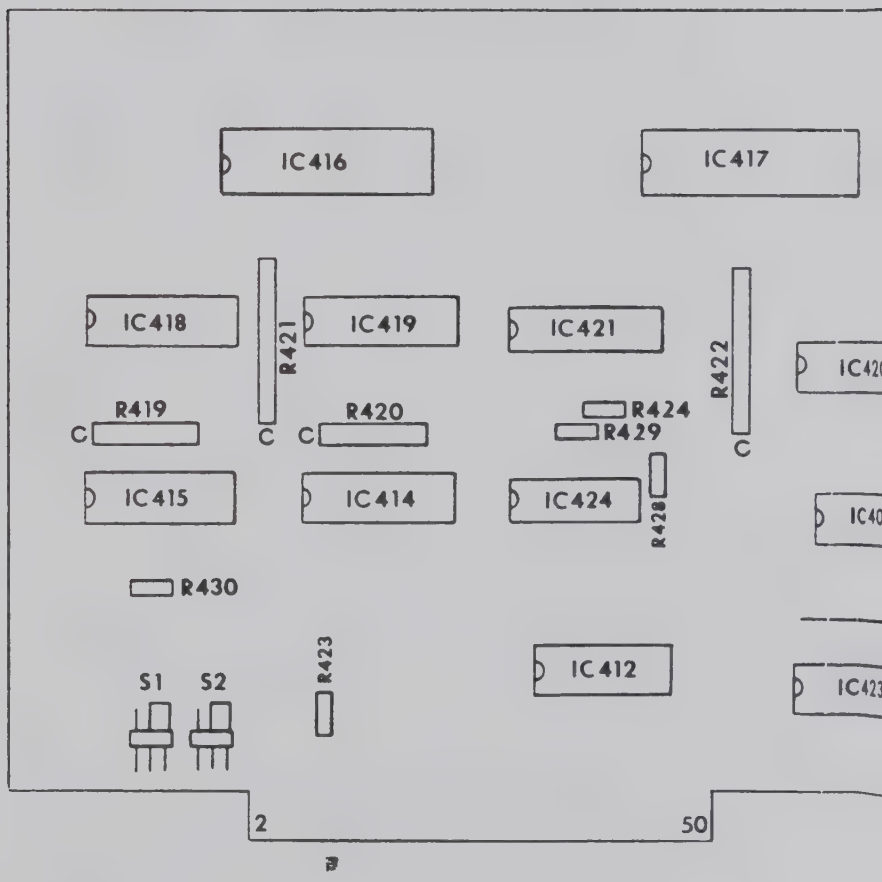
IC416
IC417
IC418
R421
IC419
IC421
R422
IC420
R419
R420
R424
R429
IC415
IC414
IC424
R428
IC40
R430
R423
IC412
IC423
S1
S2
2
50

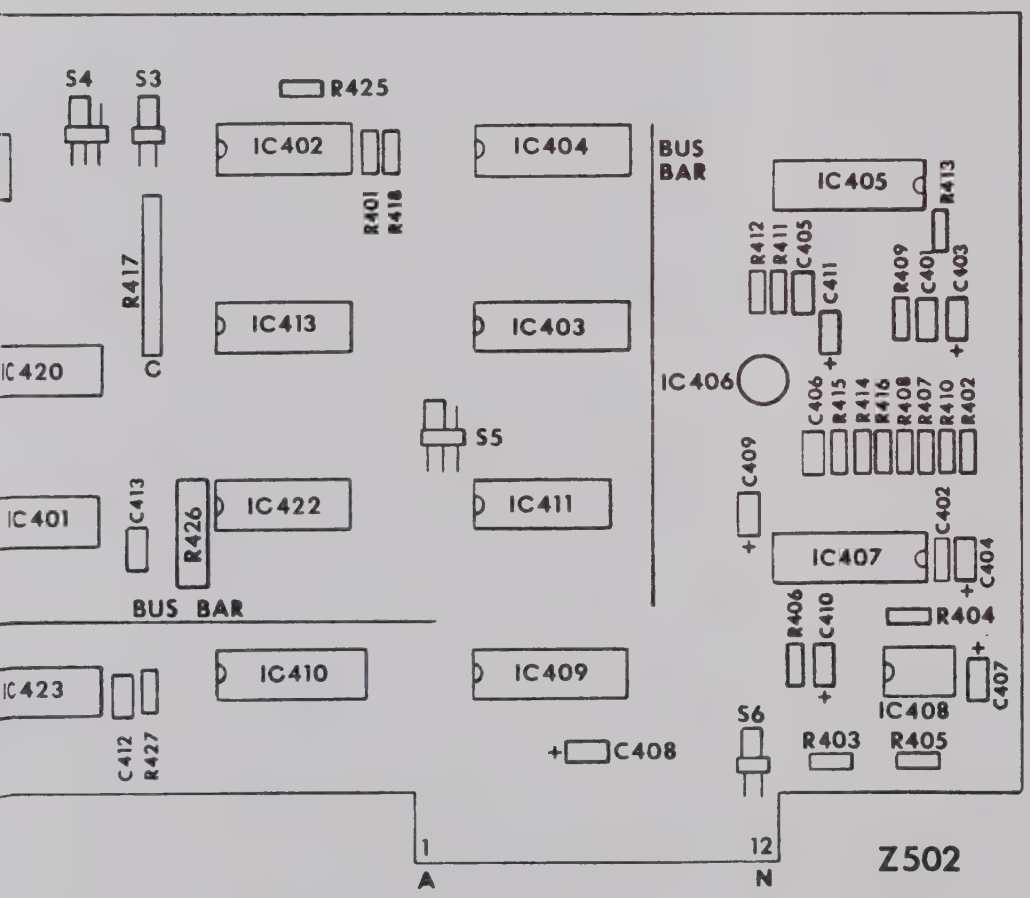
S4
S3
R425
IC402
IC404
BUS
BAR
IC405
R413
R401
R418
R412
R411
C405
C411
R409
C401
C403
R417
IC413
IC403
IC420
IC406
C406
R415
R414
R416
R408
R407
R410
R402
S5
C409
IC401
C413
R426
IC422
IC411
C402
IC407
C404
BUS BAR
R406
C410
R404
IC423
IC410
IC409
IC408
C407
S6
C412
R427
C408
R403
R405
1
12
A
N
Z502

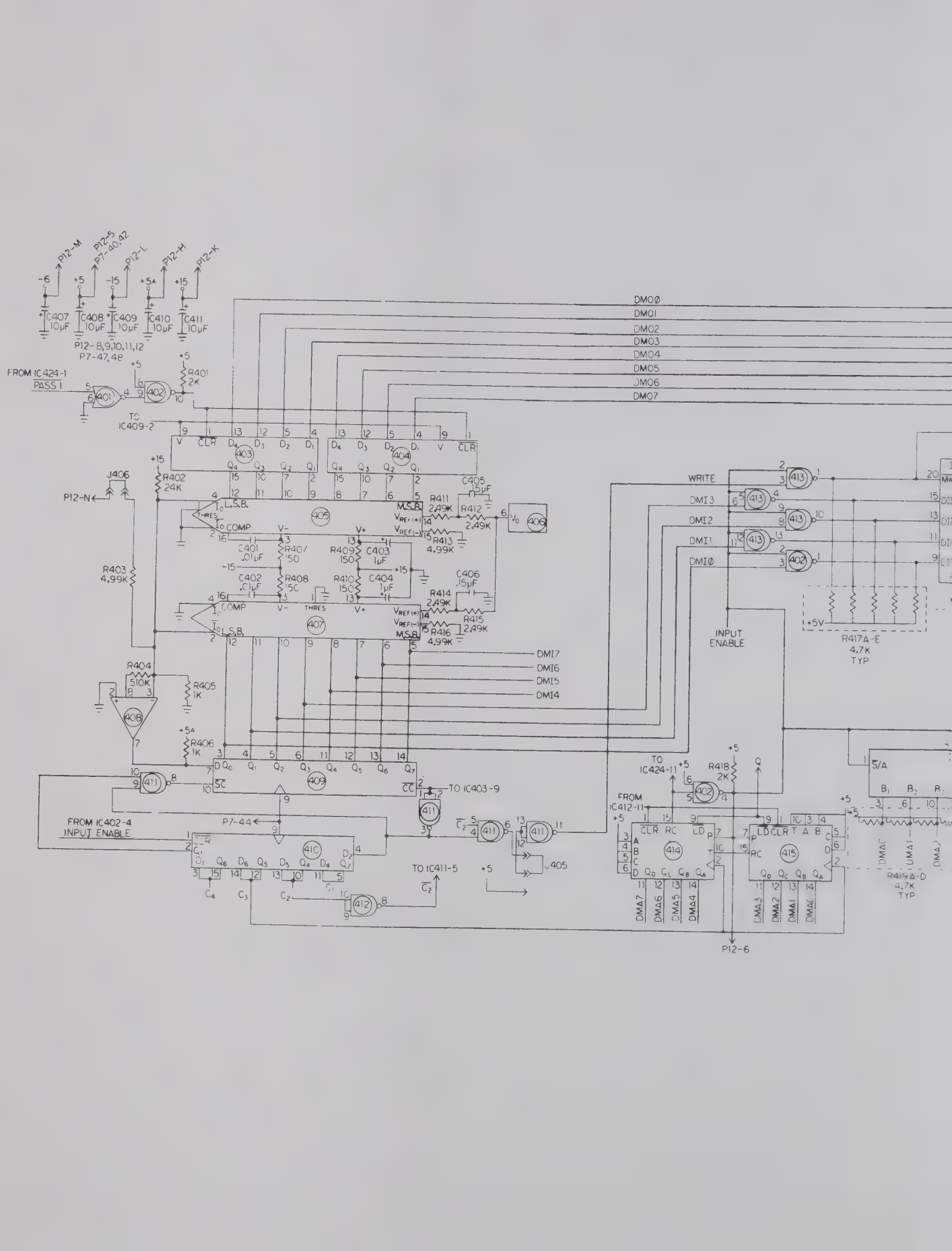
P12-M
P12-5
P7-40,42
P12-L
P12-H
P12-K
-6
+5
-15
+5A
+15
C407 10μF
C408 10μF
C409 10μF
C410 10μF
C411 10μF
P12-8,9,10,11,12
P7-47,48
FROM IC424-1
PASS 1
401
402
R401 2K
TO IC409-2
DM0Ø
DM01
DM02
DM03
DM04
DM05
DM06
DM07
403
404
J406
P12-N
R402 24K
R403 4.99K
405
L.S.B.
M.S.B.
COMP
THRES
C401 .01μF
C402 .01μF
C403 1μF
C404 1μF
C405 .15μF
C406 .15μF
R407 150
R408 150
R409 150
R410 150
R411 2.49K
R412 2.49K
R413 4.99K
R414 2.49K
R415 2.49K
R416 4.99K
406
407
R404 510K
R405 1K
408
R406 1K
409
DMI7
DMI6
DMI5
DMI4
411
412
FROM IC402-4
INPUT ENABLE
P7-44
410
TO IC403-9
TO IC411-5
405
WRITE
DMI3
DMI2
DMI1
DMIØ
413
INPUT ENABLE
+5V
R417A-E 4.7K TYP
TO IC424-11
R418 2K
FROM IC412-11
414
415
DMA7
DMA6
DMA5
DMA4
DMA3
DMA2
DMA1
DMAØ
R419A-D 4.7K TYP
P12-6

CATV SWEEP RECOVERY SYSTEM
MODEL 1865 RECEIVER
A/D-DATA MEMORY CARD
REV. –

POWER CHART						
IC	DEVICE	-6	+15	+5V	+5A	GND
401	CD4001B			14		7
402,413,422	74LS01			14		7
403,404	MC74HC175				16	8
405,407	DAC08					
406	REF01		2			4
408	AM686	4			1	6
409	AM2502				16	8
410	MC74HC174				16	8
411	MC74HCCC				14	7
412	MC74HC00			14		7
414,415	MM74HC123			16		8
416,417	CDP1822SCD			22		8
418,419	CD40257B			16		8
420,421	CDP1856CD			16		8
423				16		8
424	MC14013			14		7

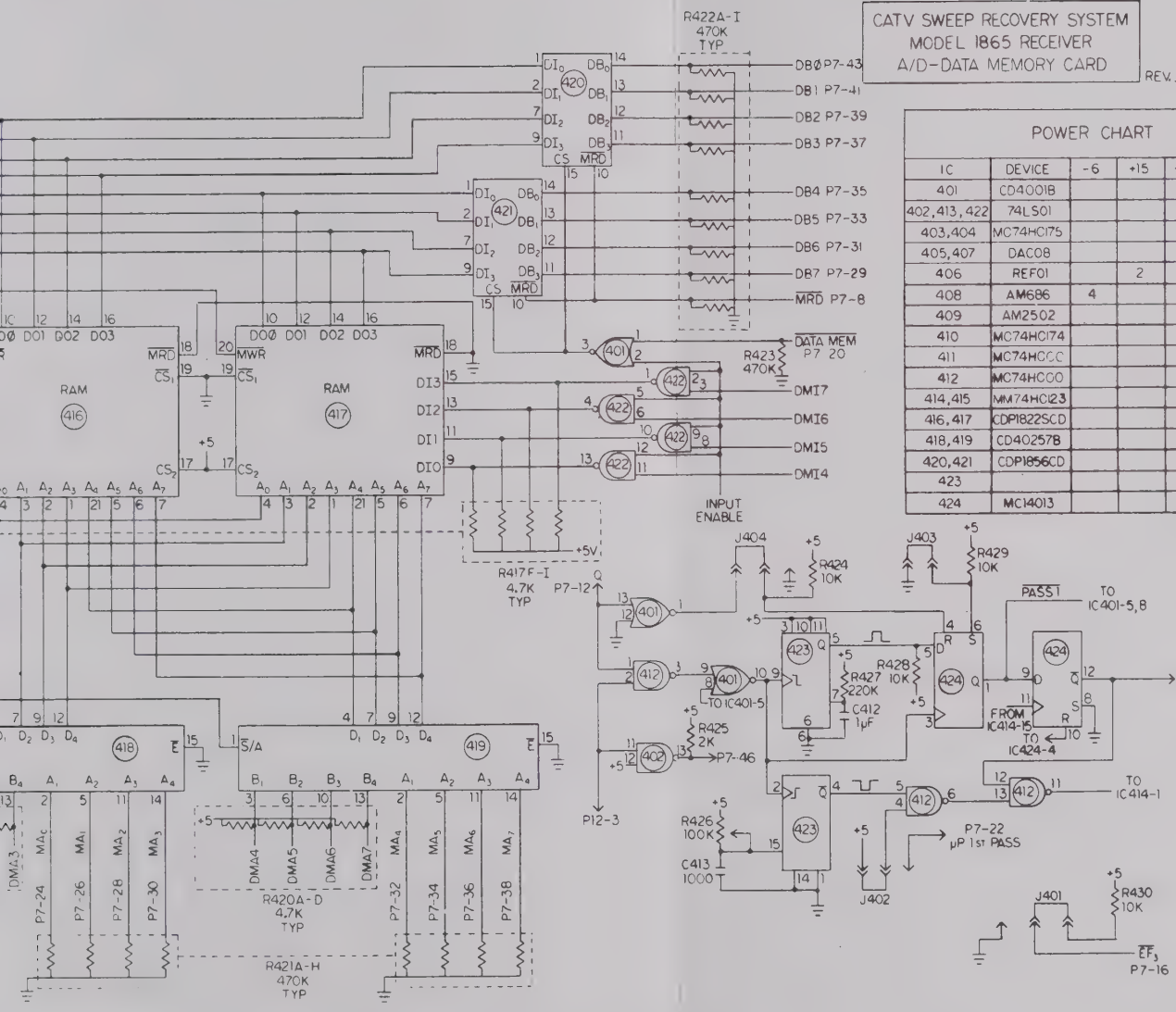

BOARD 5

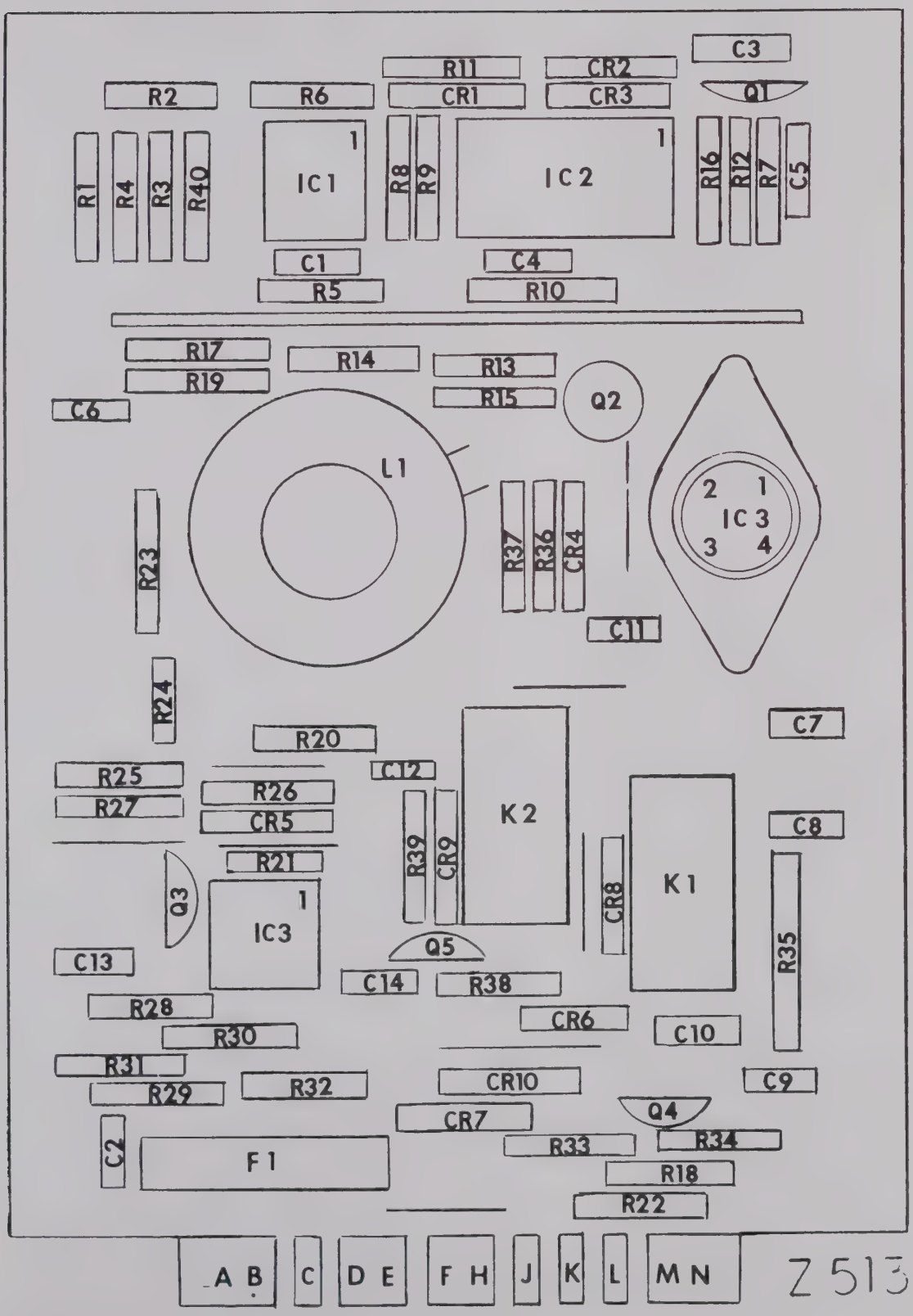

Z 513 Rev ___

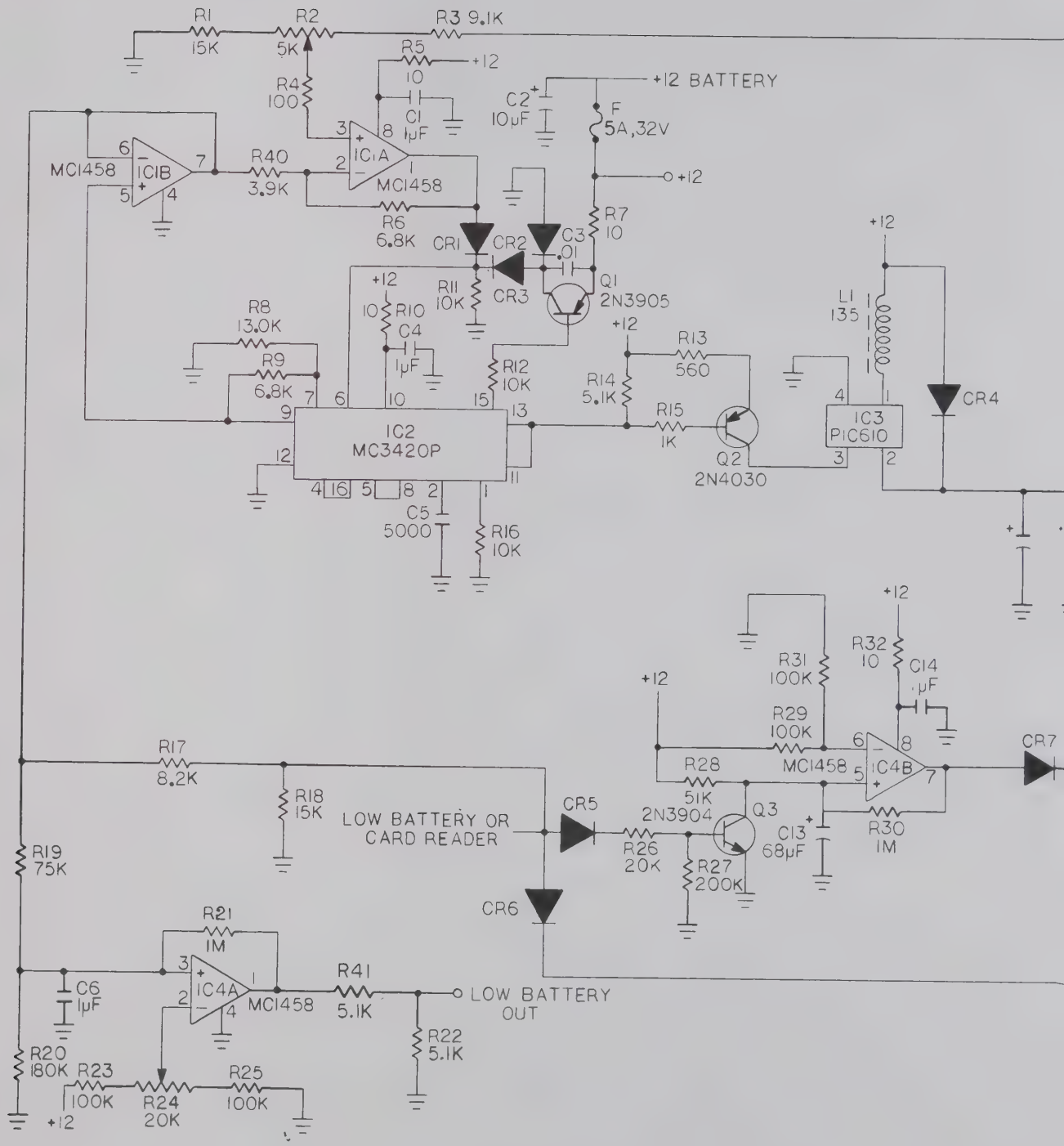
R1 15K
R2 5K
R3 9.1K
R4 100
R5 10
+12
C1 1μF
+12 BATTERY
C2 10μF
F 5A,32V
MC1458
IC1B
IC1A
MC1458
R40 3.9K
+12
R6 6.8K
CR1
CR2
C3 .01
R7 10
+12
R11 10K
CR3
Q1 2N3905
R8 13.0K
+12
R10 10
C4 1μF
R12 10K
+12
R13 560
R14 5.1K
R15 1K
R9 6.8K
IC2 MC3420P
Q2 2N4030
LI 135
IC3 PIC610
CR4
C5 5000
R16 10K
+12
R32 10
C14 .1μF
R31 100K
+12
R29 100K
R17 8.2K
R28 51K
MC1458
IC4B
CR7
R18 15K
LOW BATTERY OR CARD READER
CR5
2N3904
Q3
R26 20K
R27 200K
C13 68μF
R30 1M
R19 75K
CR6
R21 1M
IC4A
MC1458
R41 5.1K
LOW BATTERY OUT
C6 1μF
R20 180K
R23 100K
R24 20K
R25 100K
+12
R22 5.1K

1865 POWER SUPPLY PC CARD 5

REV. A

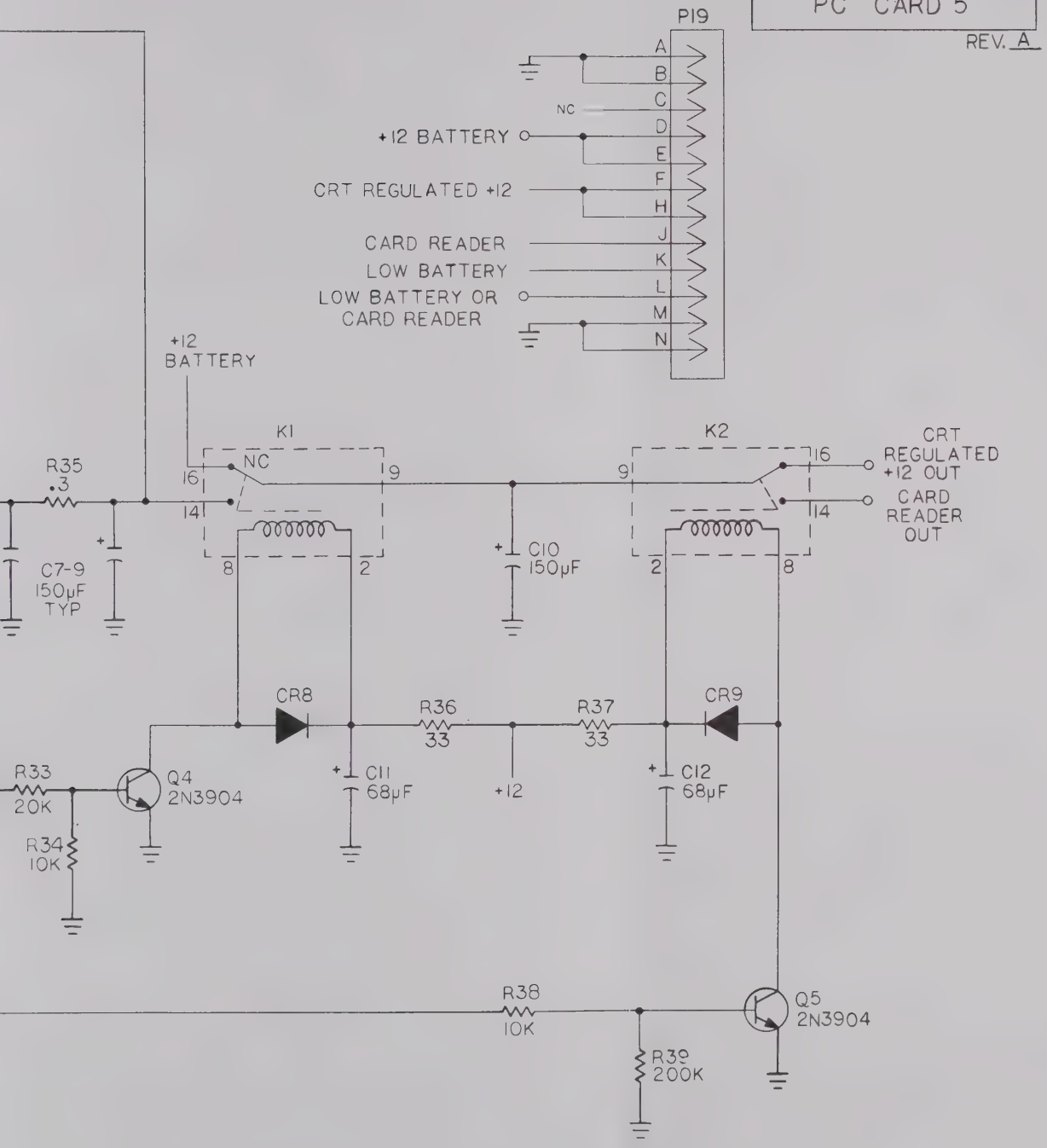

REVISIONS			WAVETEK INDIANA	
	ECN'S	BY		
A	—	—	1865 Power Supply Card 5	
B				
C			DRAWN BY / DATE / NUMBER	
D			Bob Naylor / 5/1/80 / 0414-30-0017	
E			APP'D / WM	

BOARD 3+4

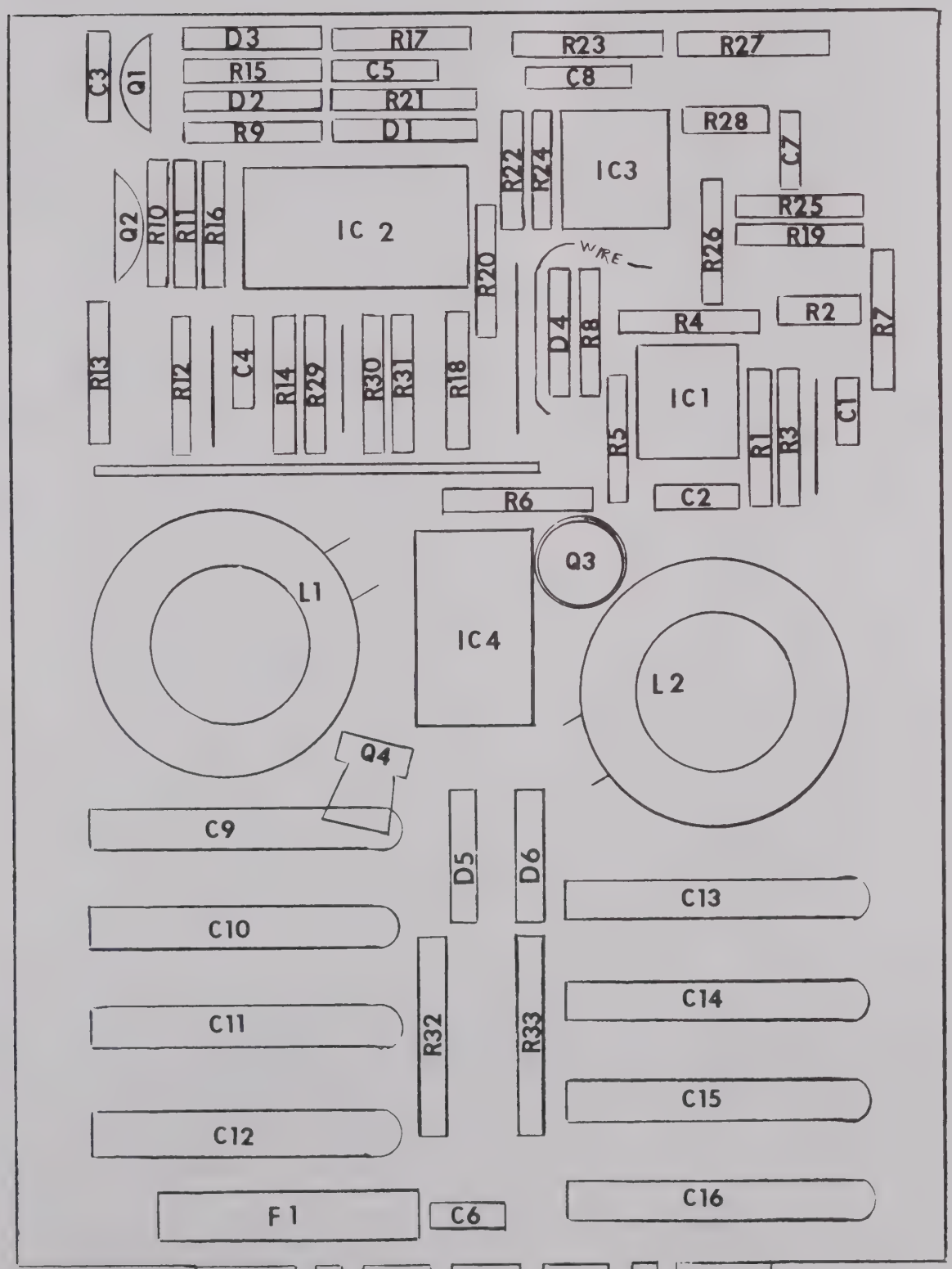
D3
R17
R23
R27
C3
Q1
R15
C5
C8
D2
R21
R28
R9
D1
R22
R24
IC3
C7
Q2
R10
R11
R16
IC 2
R25
R19
R20
WIRE
R26
D4
R8
R4
R2
R7
R13
R12
C4
R14
R29
R30
R31
R18
IC1
R1
R3
C1
R5
C2
R6
L1
IC4
Q3
L2
Q4
C9
D5
D6
C13
C10
C14
C11
R32
R33
C15
C12
C16
F1
C6
A B
C
D E
F H
J K
L
M N
Z 512 Rev

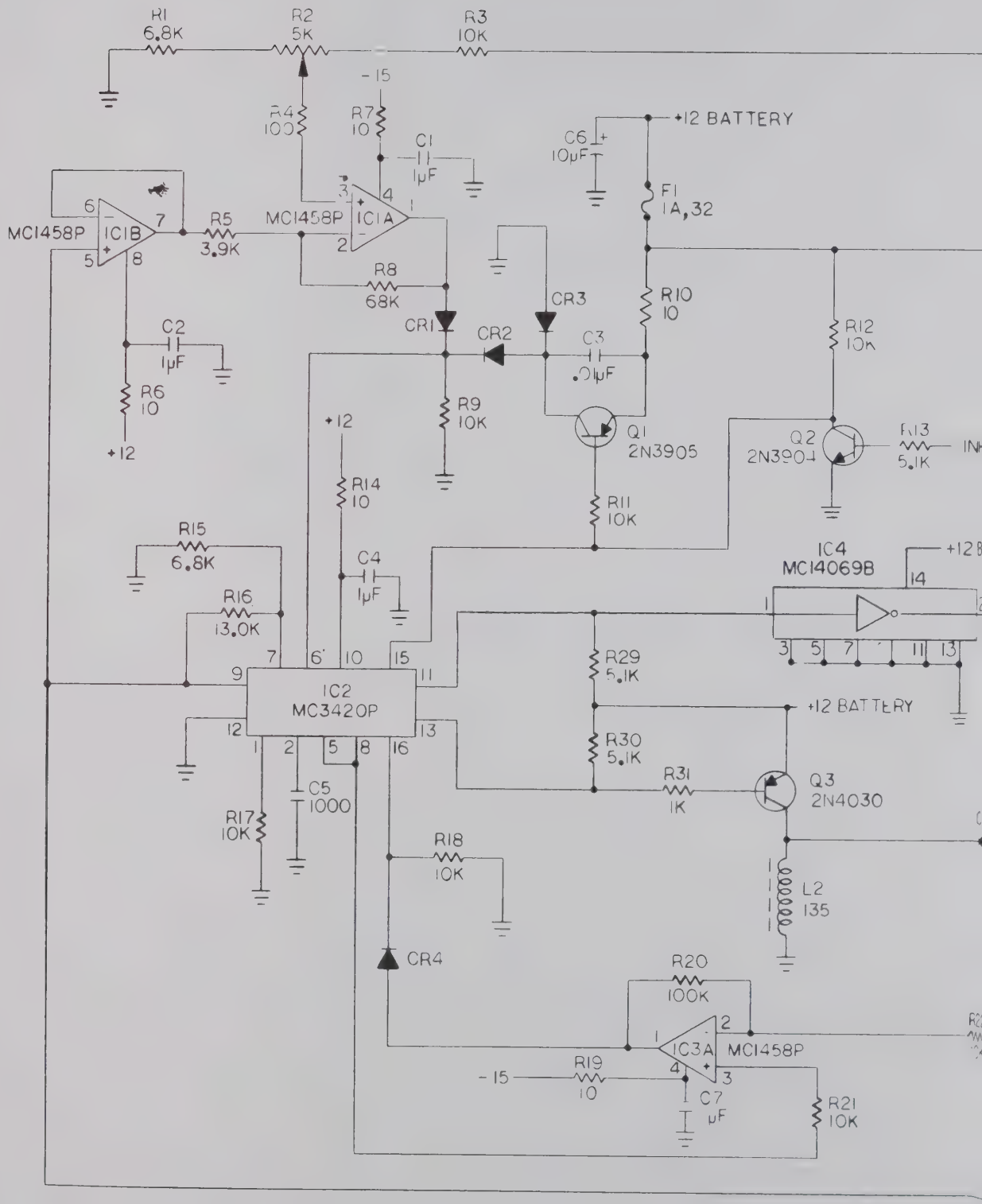
R1
6.8K
R2
5K
R3
10K
-15
R4
100
R7
10
C1
1μF
+12 BATTERY
C6
10μF
F1
1A,32
MC1458P
IC1B
R5
3.9K
MC1458P
IC1A
R8
68K
CR1
CR2
CR3
R10
10
C2
1μF
C3
.01μF
R12
10K
R6
10
R9
10K
+12
Q1
2N3905
Q2
2N3904
R13
5.1K
R14
10
R11
10K
R15
6.8K
C4
1μF
IC4
MC14069B
+12
R16
13.0K
IC2
MC3420P
R29
5.1K
+12 BATTERY
R30
5.1K
R31
1K
Q3
2N4030
C5
1000
R17
10K
R18
10K
L2
135
CR4
R20
100K
IC3A
MC1458P
-15
R19
10
C7
μF
R21
10K

1865 POWER SUPPLY
PC CARD 4

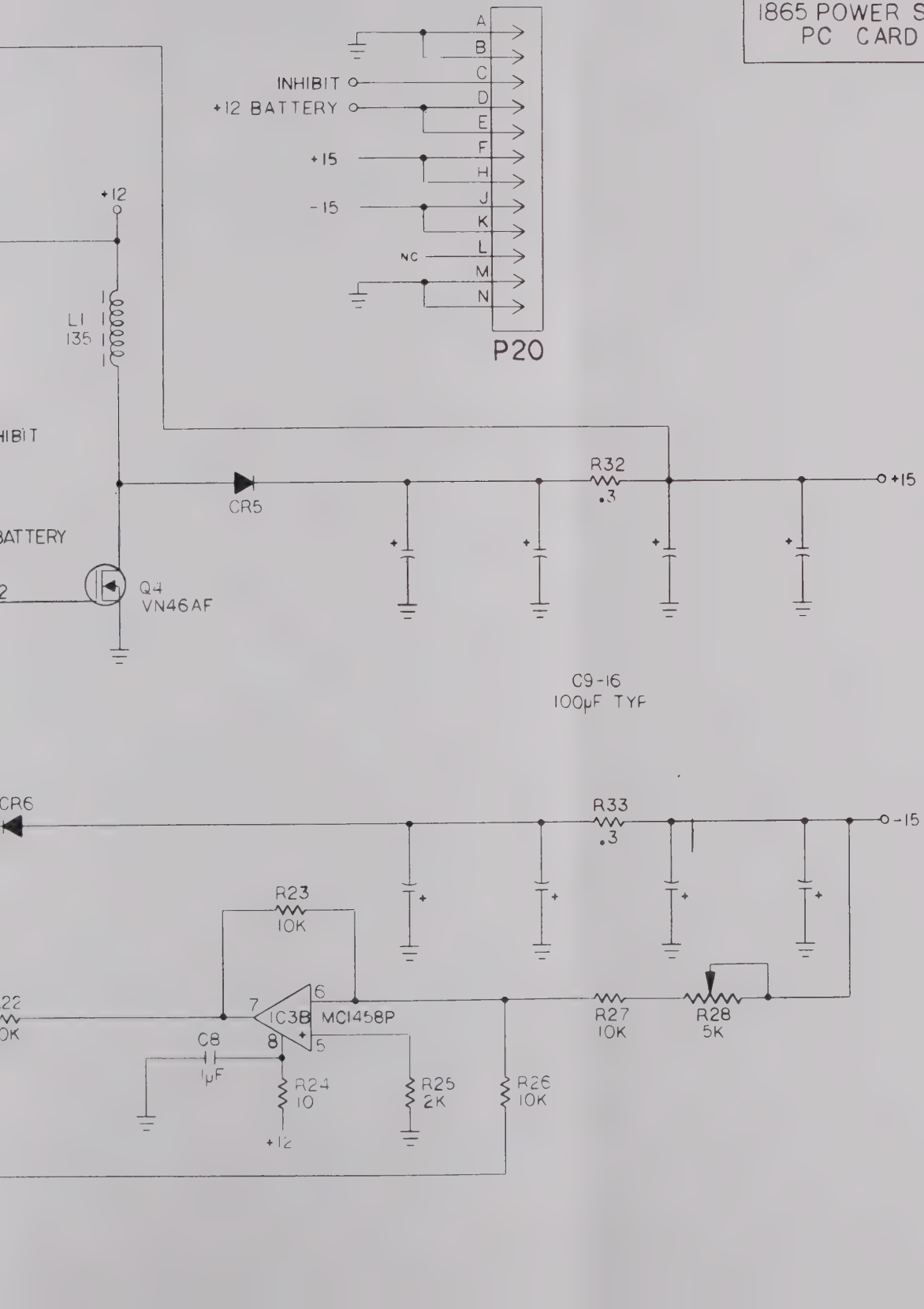

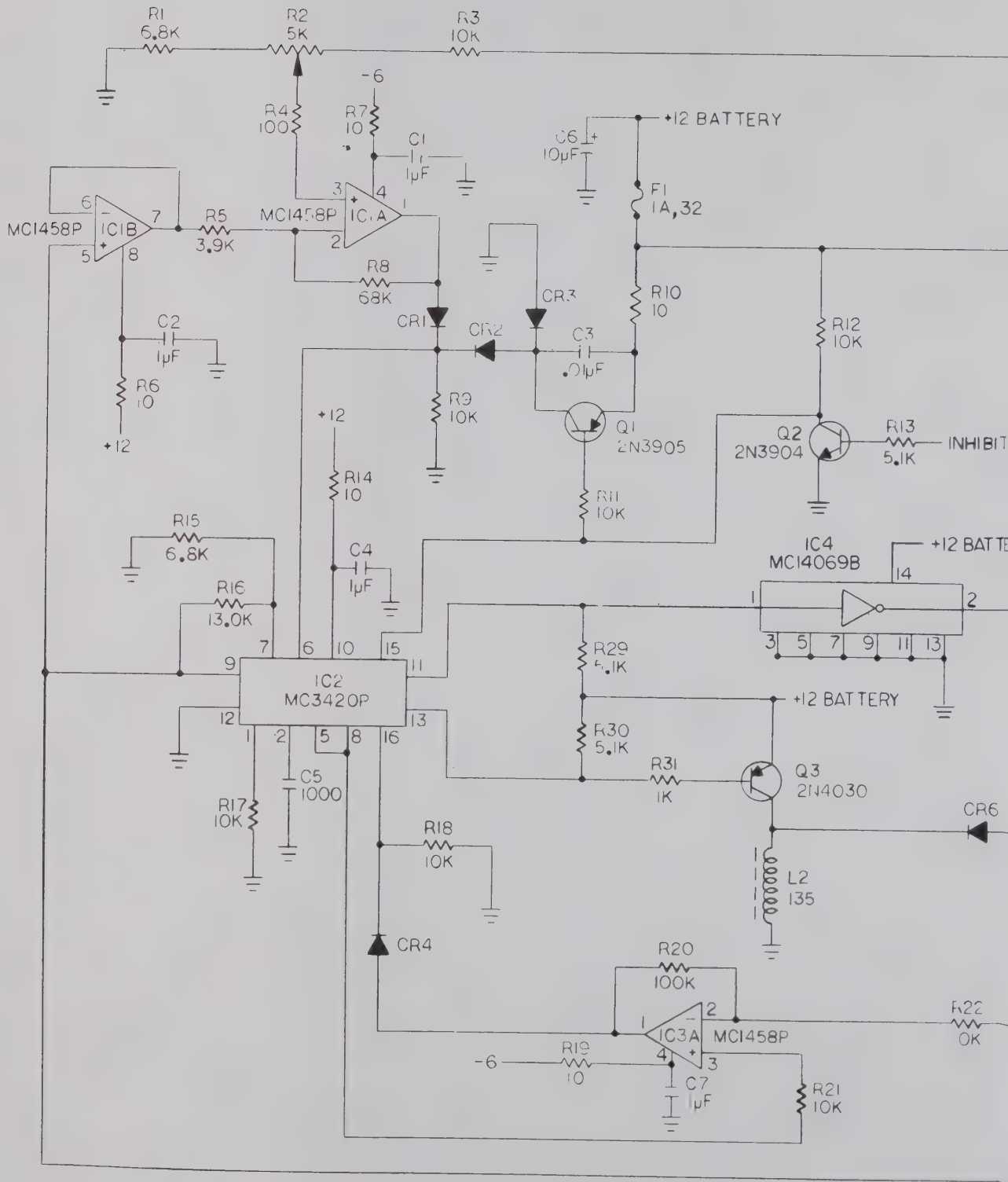
R1
6.8K
R2
5K
R3
10K
-6
R4
100
R7
10
C1
1μF
+12 BATTERY
C6
10μF
F1
1A,32
MC1458P
IC1B
R5
3.9K
MC1458P
IC1A
R8
68K
CR1
CR2
CR3
R10
10
R12
10K
C2
1μF
C3
.01μF
R6
10
+12
R9
10K
Q1
2N3905
Q2
2N3904
R13
5.1K
INHIBIT
+12
R14
10
R11
10K
R15
6.8K
C4
1μF
IC4
MC14069B
+12 BATTE
R16
13.0K
R29
5.1K
IC2
MC3420P
+12 BATTERY
R30
5.1K
R31
1K
Q3
2N4030
C5
1000
R17
10K
R18
10K
CR6
L2
135
CR4
R20
100K
R22
0K
IC3A
MC1458P
-6
R19
10
C7
1μF
R21
10K

1865 POWER SUPPLY
PC CARD 3

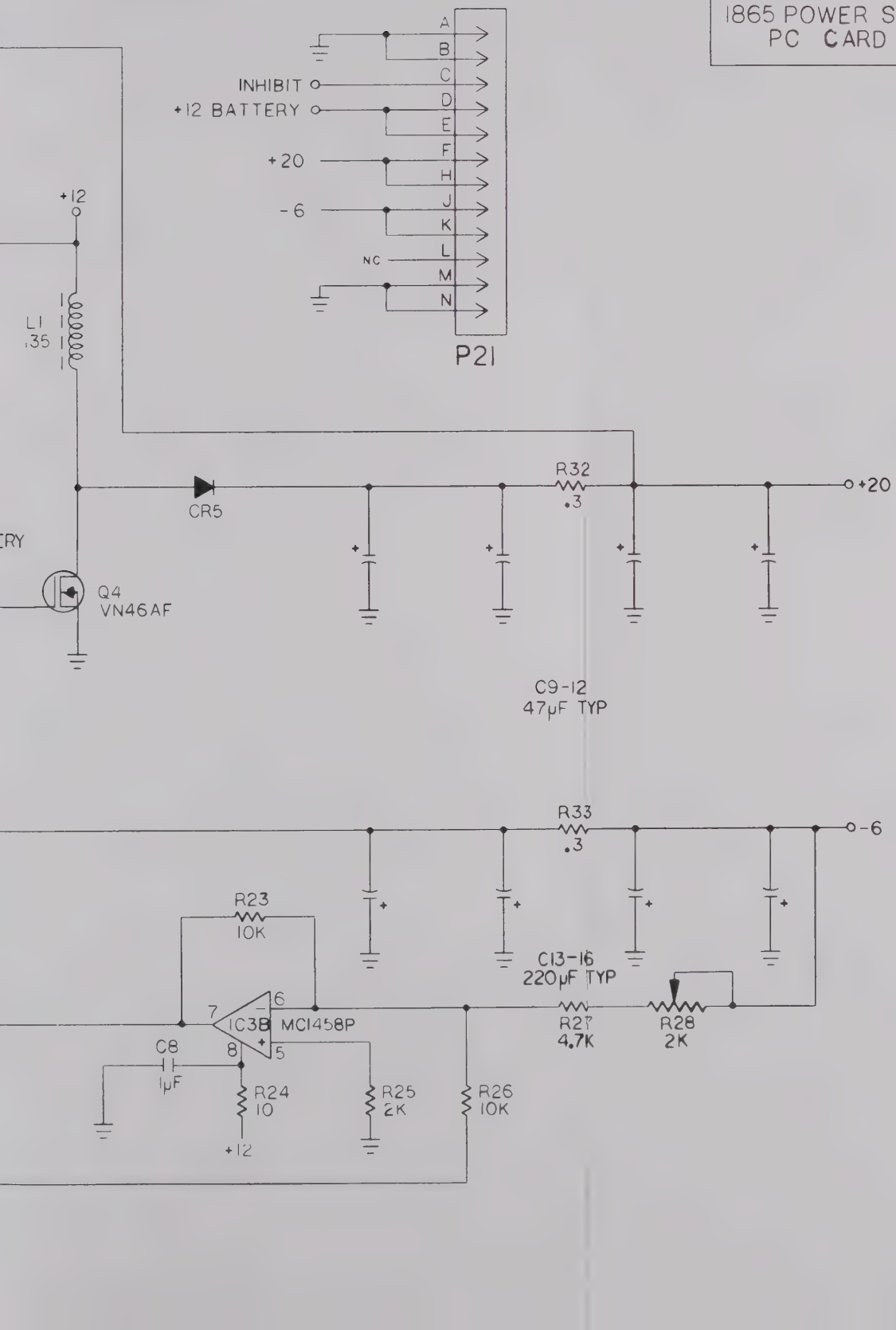

BOARD 1+2

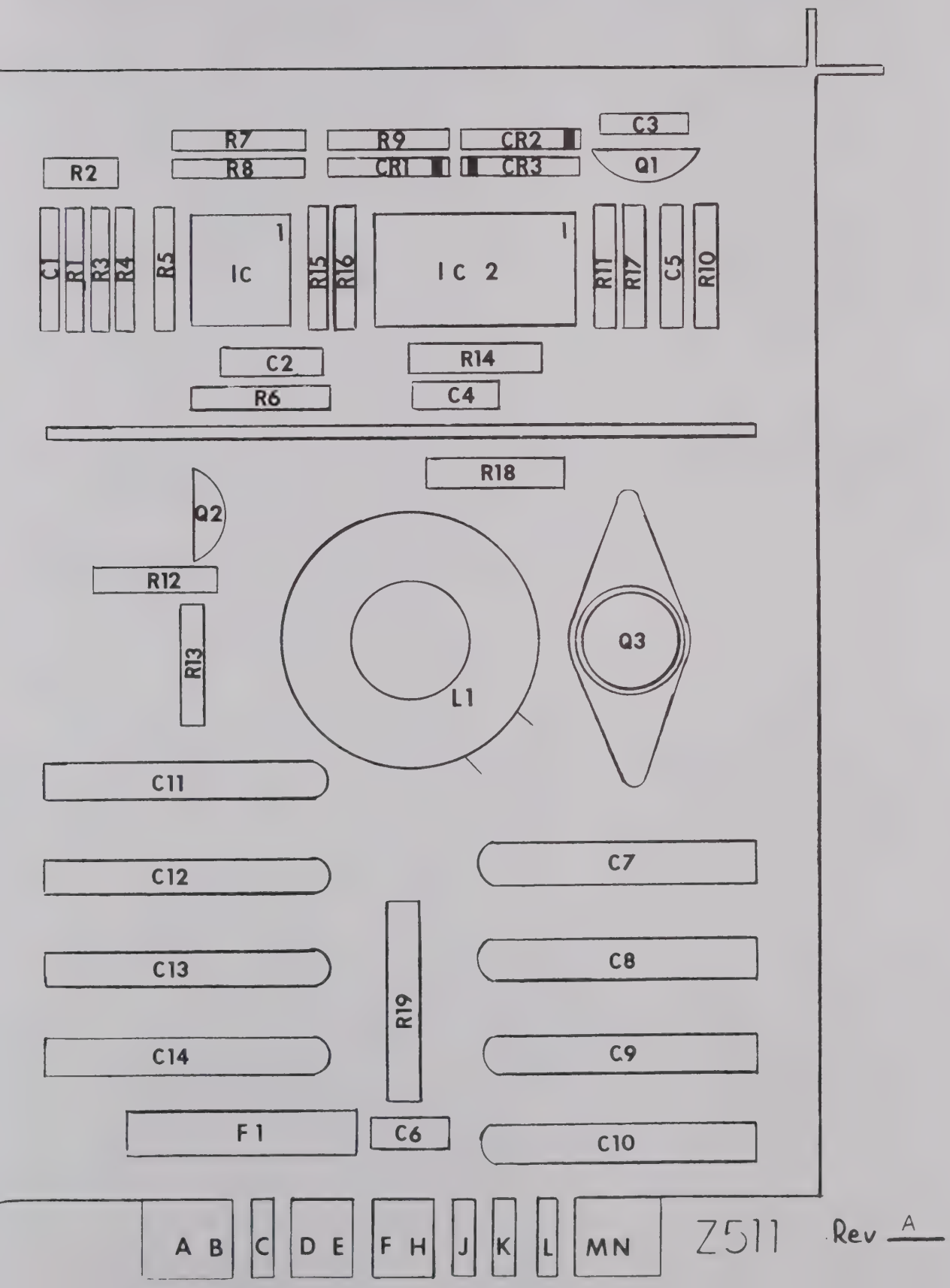
R7
R8
R9
CR1
CR2
CR3
C3
Q1
R2
C1
R1
R3
R4
R5
IC
1
R15
R16
IC 2
1
R11
R17
C5
R10
C2
R6
R14
C4
R18
Q2
R12
R13
L1
Q3
C11
C12
C13
C14
R19
C7
C8
C9
C10
F1
C6
A B
C
D E
F H
J
K
L
MN
Z511
Rev A

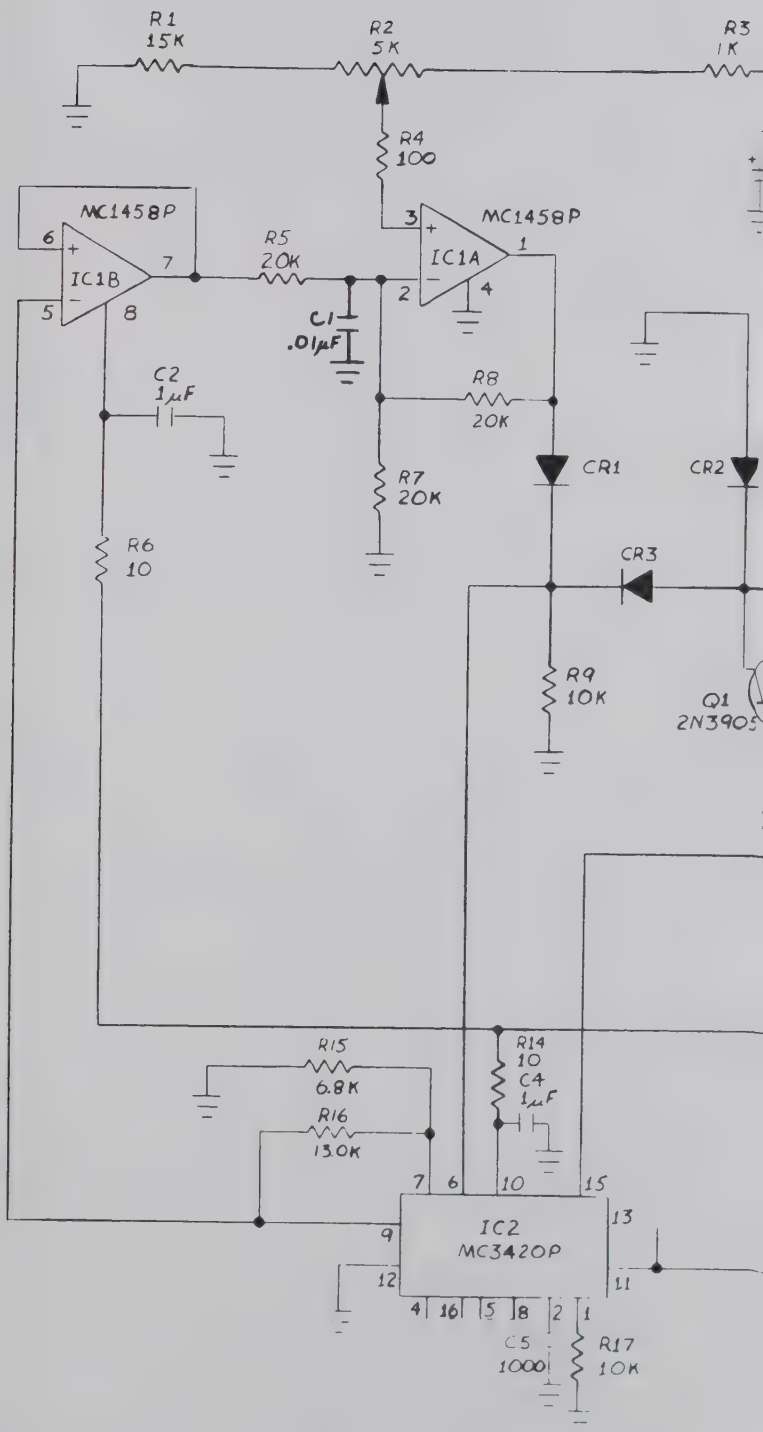
R1
15K
R2
5K
R3
1K
R4
100
MC1458P
IC1B
R5
20K
MC1458P
IC1A
C1
.01μF
C2
1μF
R8
20K
R7
20K
CR1
CR2
R6
10
CR3
R9
10K
Q1
2N3905
R15
6.8K
R16
13.0K
R14
10
C4
1μF
IC2
MC3420P
C5
1000
R17
10K

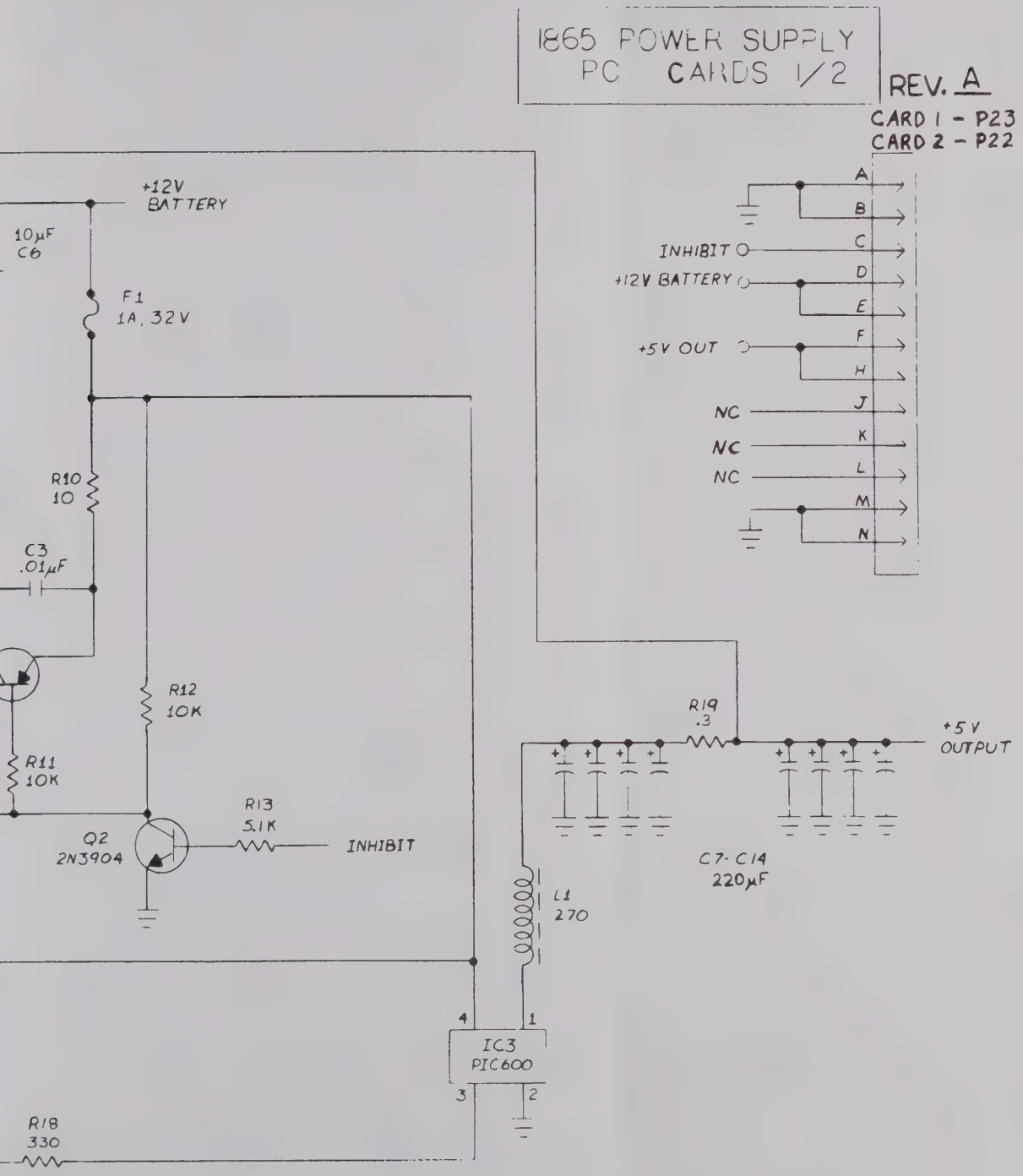
1865 POWER SUPPLY
PC CARDS 1/2
REV. A
CARD 1 - P23
CARD 2 - P22
A
B
C
D
E
F
H
J
K
L
M
N
INHIBIT
+12V BATTERY
+5V OUT
NC
NC
NC
+12V
BATTERY
10μF
C6
F1
1A, 32V
R10
10
C3
.01μF
R12
10K
R11
10K
R13
5.1K
Q2
2N3904
INHIBIT
R19
.3
+5V
OUTPUT
C7-C14
220μF
L1
270
4
1
IC3
PIC600
3
2
R18
330

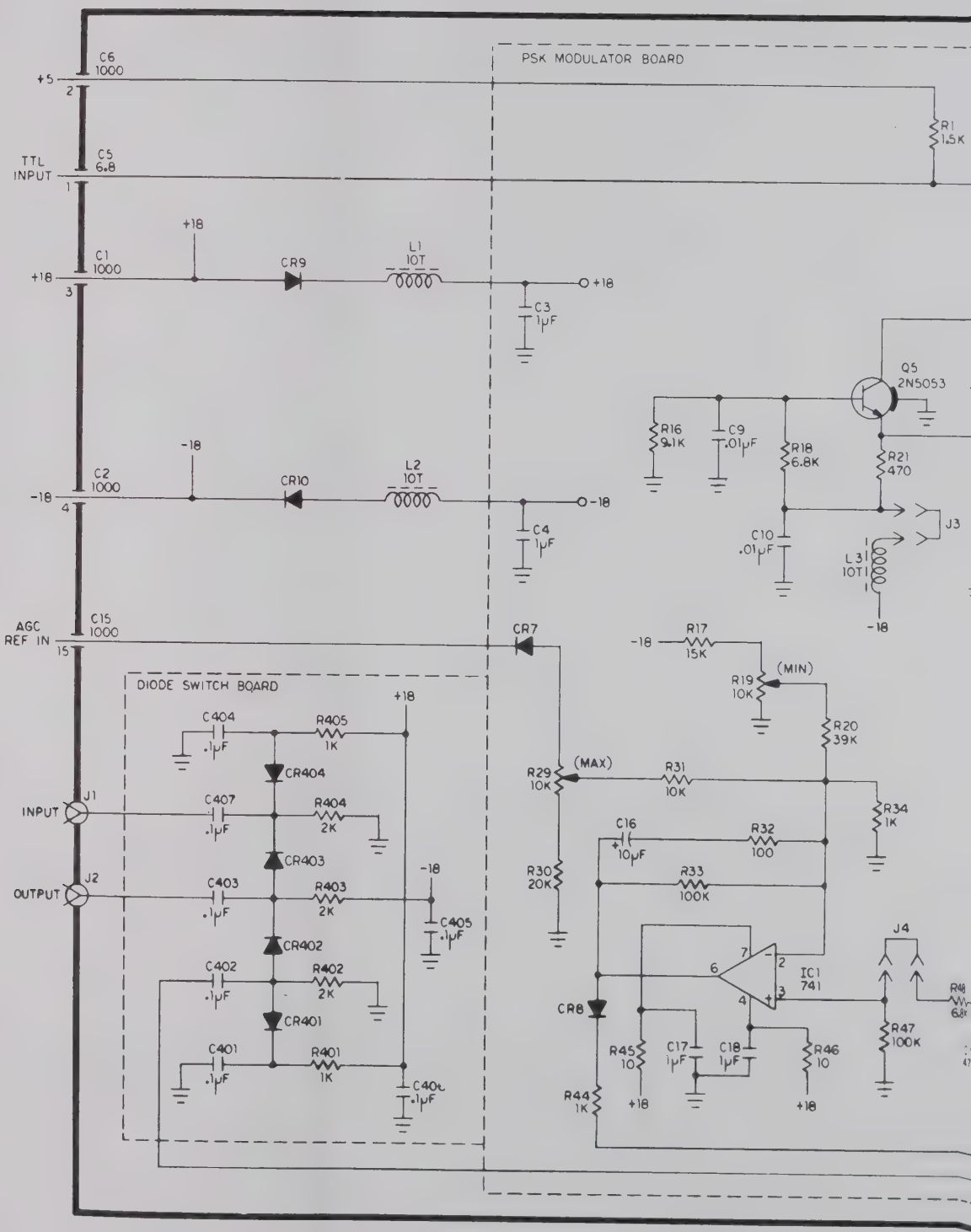
PSK MODULATOR BOARD
+5
TTL INPUT
+18
-18
AGC REF IN
C6 1000
C5 6.8
C1 1000
C2 1000
C15 1000
CR9
CR10
CR7
L1 10T
L2 10T
C3 1µF
C4 1µF
R1 1.5K
Q5 2N5053
R16 9.1K
C9 .01µF
R18 6.8K
R21 470
C10 .01µF
L3 10T
J3
R17 15K
R19 10K
(MIN)
R20 39K
R29 10K
(MAX)
R31 10K
R34 1K
C16 10µF
R32 100
R30 20K
R33 100K
IC1 741
J4
CR8
R45 10
C17 1µF
C18 1µF
R46 10
R47 100K
R44 1K
DIODE SWITCH BOARD
J1
J2
INPUT
OUTPUT
C404 .1µF
R405 1K
CR404
C407 .1µF
R404 2K
CR403
C403 .1µF
R403 2K
C405 .1µF
CR402
C402 .1µF
R402 2K
CR401
C401 .1µF
R401 1K
C406 .1µF

M135-5
PSK MODULATOR Rev. A

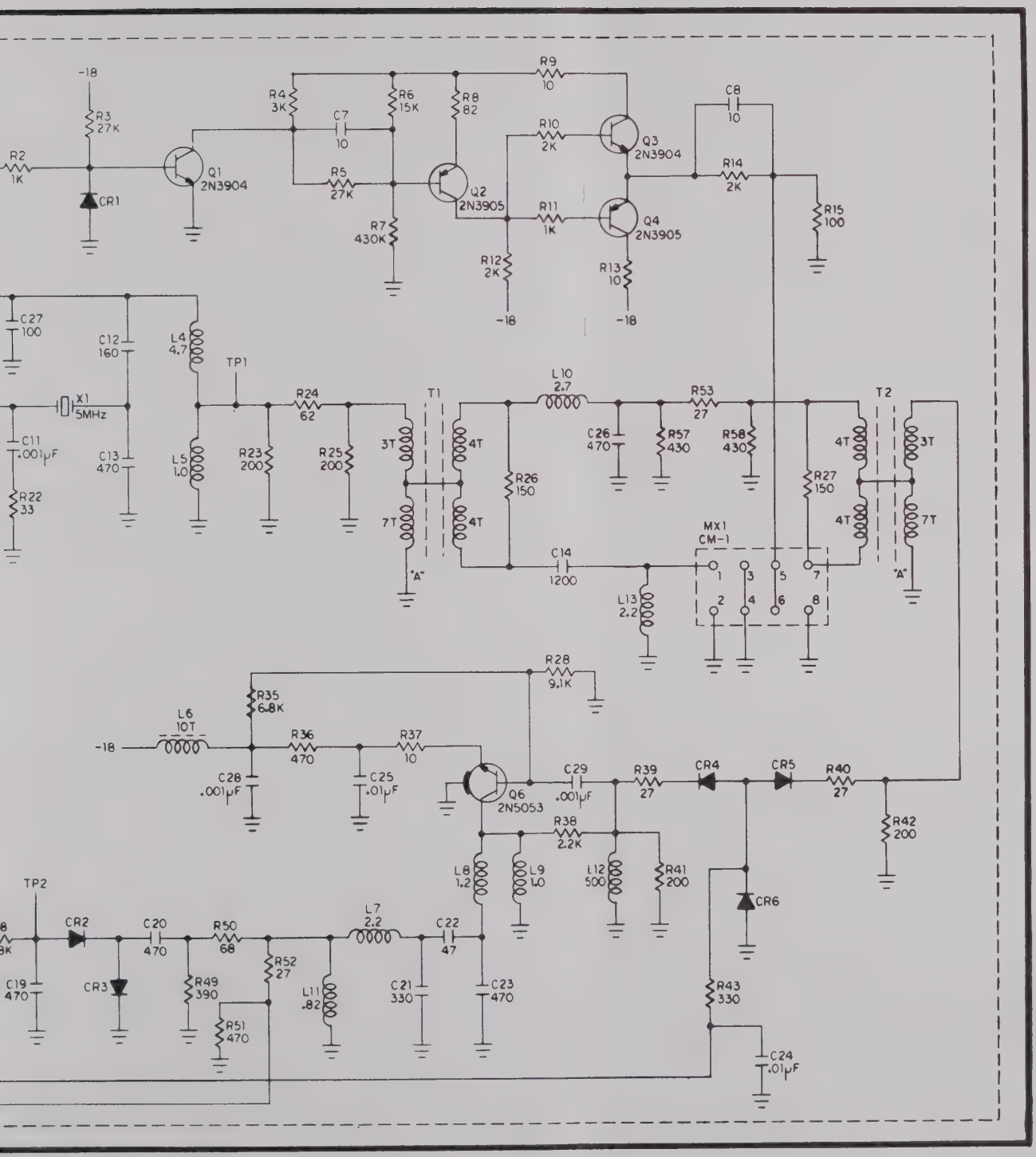

M135-155
DIODE SWITCH BOARD

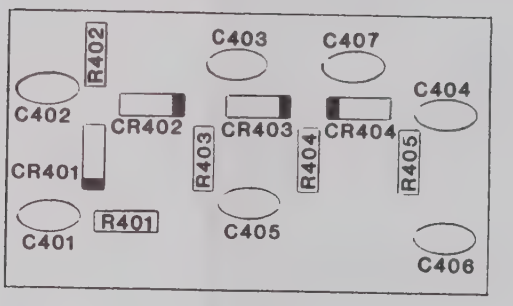

M135-155

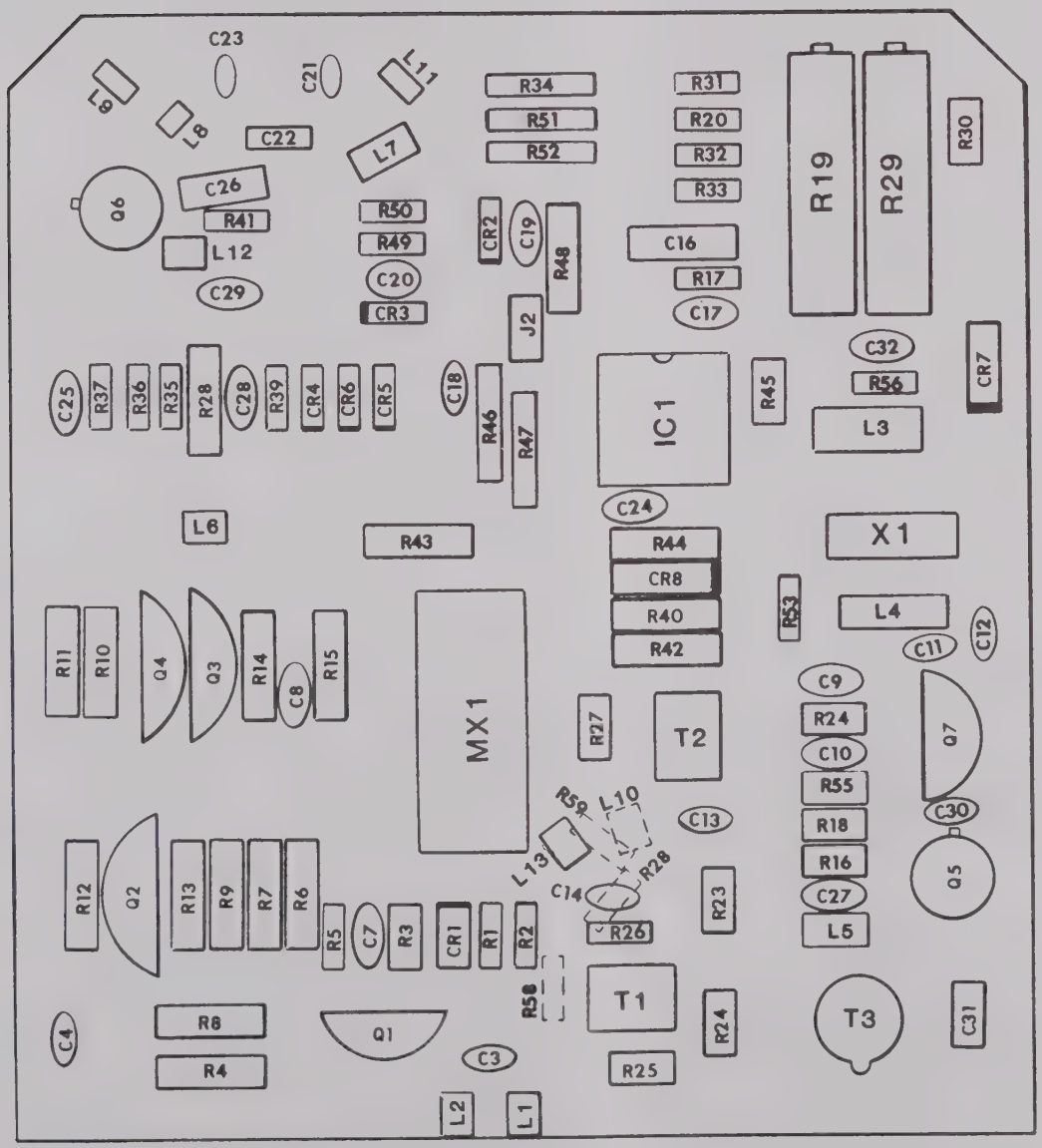
C23
C21
L11
L9
L8
C22
L7
R34
R51
R52
R31
R20
R32
R33
R19
R29
R30
Q6
C26
R41
L12
C29
R50
R49
C20
CR3
CR2
C19
R48
C16
R17
C17
J2
C32
R56
CR7
C25
R37
R36
R35
R28
C28
R39
CR4
CR6
CR5
C18
R46
R47
IC1
R45
L3
C24
L6
R43
R44
CR8
R40
R42
X1
R53
L4
C11
C12
R11
R10
Q4
Q3
R14
C8
R15
MX1
R27
T2
C9
R24
C10
R55
R18
R16
R27
C13
C30
Q7
Q5
R59
L10
L13
C14
R28
R12
Q2
R13
R9
R7
R6
R5
C7
R3
CR1
R1
R2
R26
R23
L5
R58
T1
T3
C31
C4
R8
R4
Q1
C3
R25
R24
L2
L1

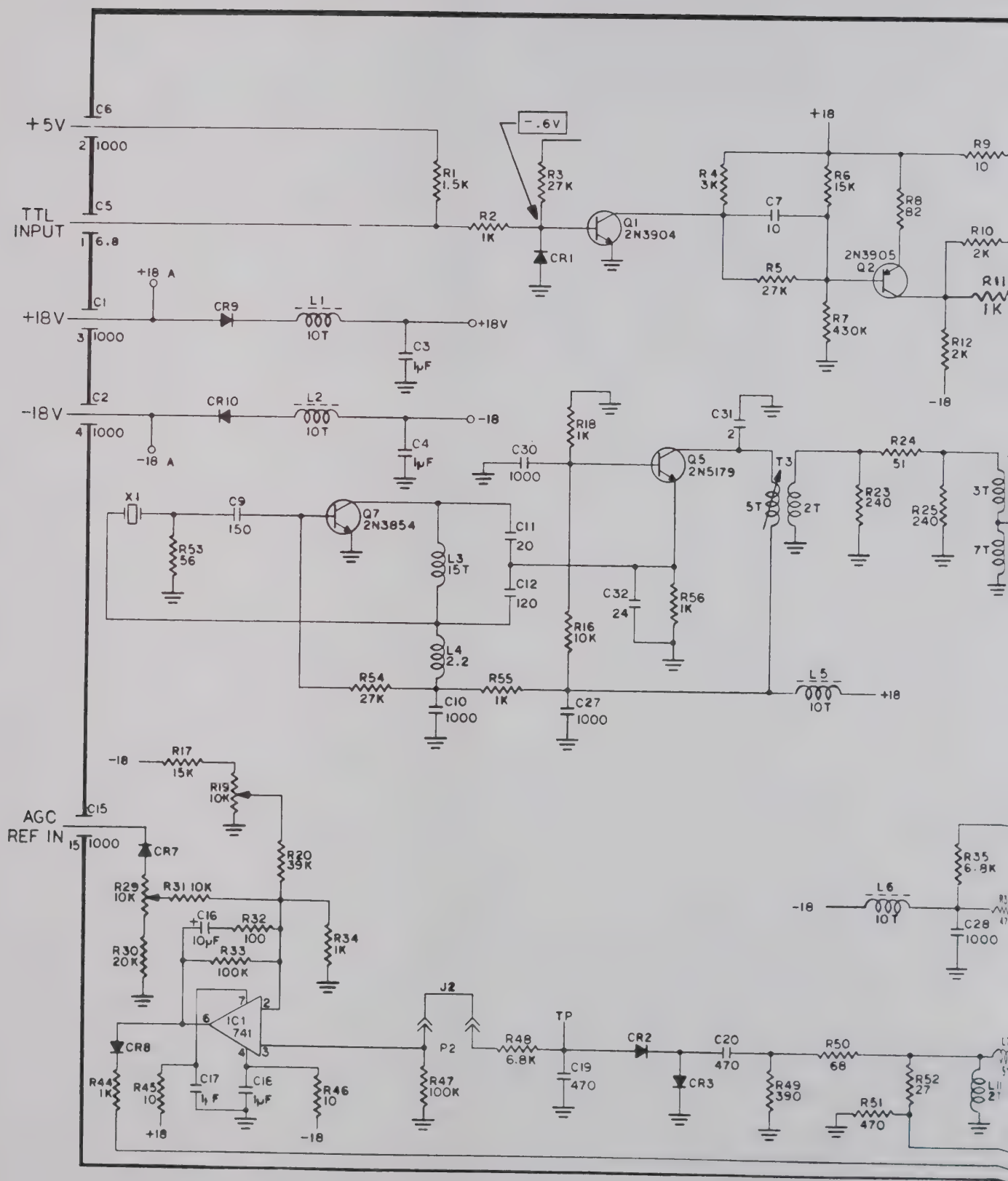
+5V
C6
2 1000
C5
TTL INPUT
1 6.8
C1
+18V
3 1000
C2
-18V
4 1000
+18 A
-18 A
CR9
CR10
L1
L2
10T
C3 1μF
C4 1μF
+18V
-18
R1 1.5K
R2 1K
R3 27K
-.6V
CR1
Q1 2N3904
R4 3K
R5 27K
C7 10
R6 15K
R7 430K
R8 82
2N3905 Q2
R9 10
R10 2K
R11 1K
R12 2K
+18
X1
C9 150
R53 56
Q7 2N3854
L3 15T
C11 20
C12 120
L4 2.2
R54 27K
R55 1K
C10 1000
C27 1000
R16 10K
R18 1K
C30 1000
Q5 2N5179
C31 2
C32 24
R56 1K
T3
5T
2T
R24 51
R23 240
R25 240
3T
7T
L5
10T
+18
AGC REF IN
15 1000
C15
-18
R17 15K
R19 10K
CR7
R20 39K
R29 10K
R31 10K
C16 10μF
R32 100
R33 100K
R30 20K
R34 1K
IC1 741
CR8
R44 1K
R45 10
+18
C17 1μF
C18 1μF
R46 10
-18
J2
P2
R47 100K
R48 6.8K
TP
C19 470
CR2
CR3
C20 470
R49 390
R50 68
R51 470
R52 27
L6
10T
R35 6.8K
C28 1000
-18

PSK MODULATOR
M135-155
Rev A

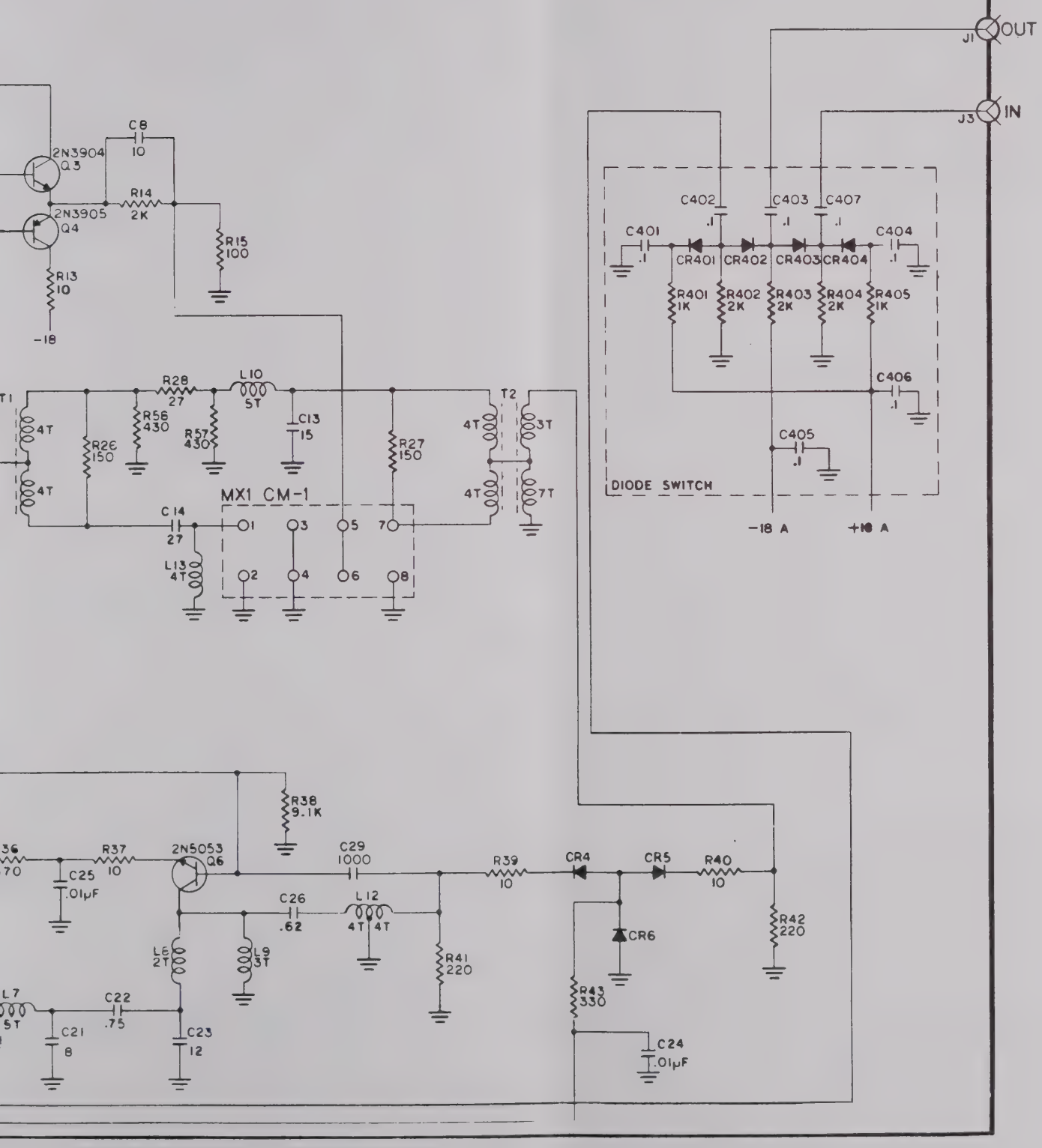

M119-155
DIODE SWITCH BOARD

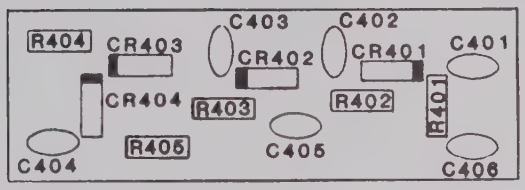

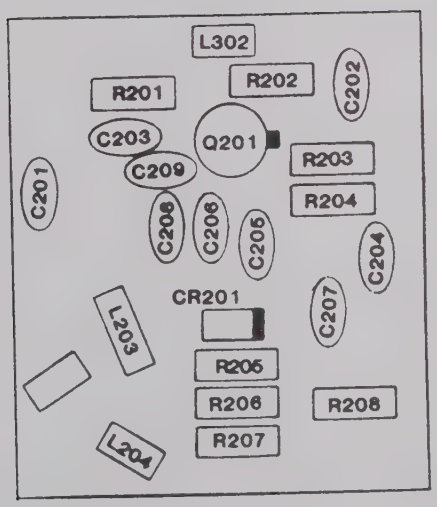

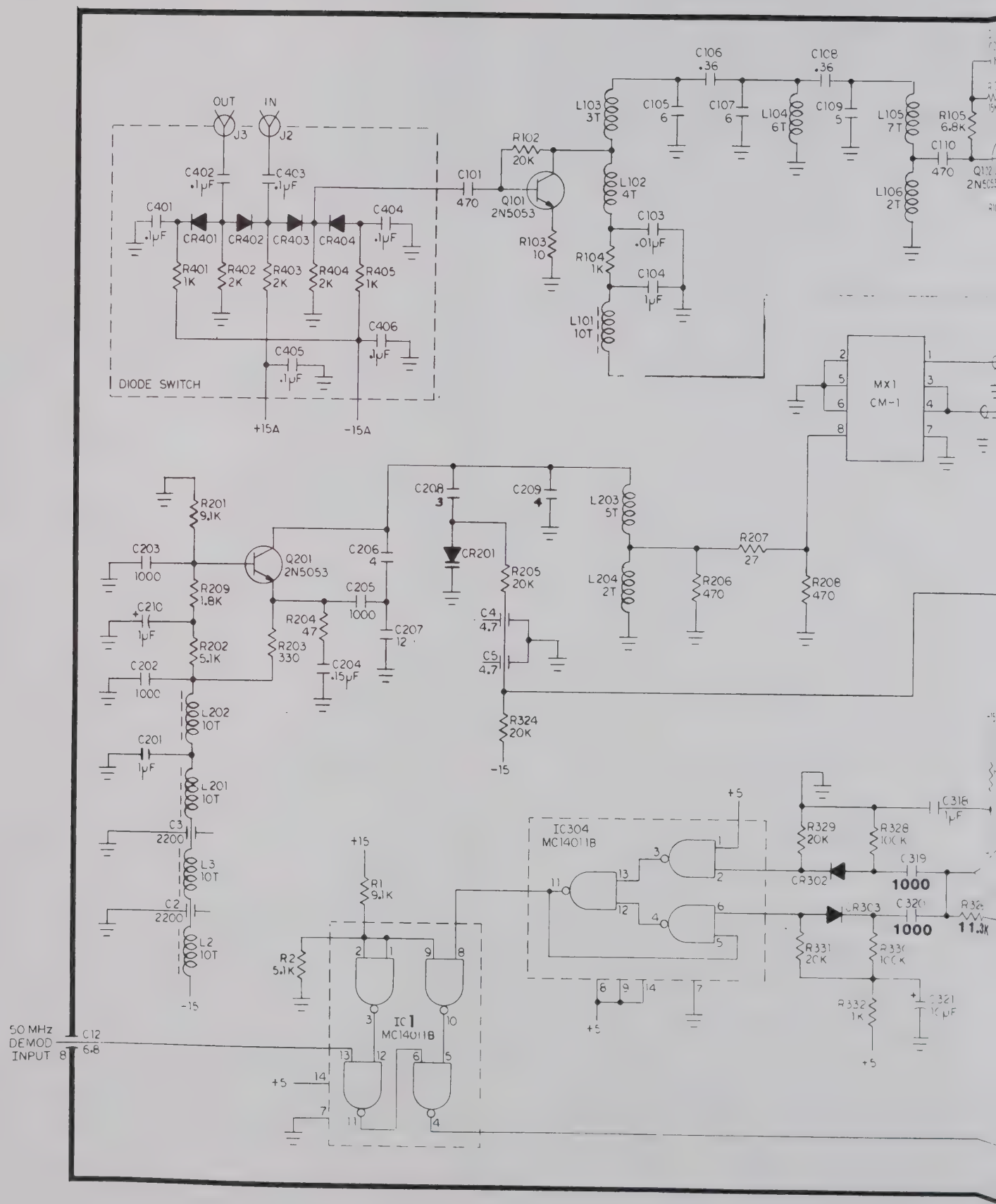
OUT
IN
J3
J2
C402 .1μF
C403 .1μF
C401 .1μF
CR401
CR402
CR403
CR404
C404 .1μF
R401 1K
R402 2K
R403 2K
R404 2K
R405 1K
C406 .1μF
C405 .1μF
DIODE SWITCH
+15A
-15A
C101 470
R102 20K
Q101 2N5053
R103 10
R104 1K
C103 .01μF
C104 1μF
L101 10T
L102 4T
L103 3T
C105 6
C106 .36
C107 6
L104 6T
C108 .36
C109 5
L105 7T
L106 2T
C110 470
R105 6.8K
Q102 2N5053
MX1 CM-1
C208 3
C209 4
L203 5T
L204 2T
R207 27
R206 470
R208 470
CR201
R205 20K
C4 4.7
C5 4.7
R324 20K
-15
R201 9.1K
C203 1000
Q201 2N5053
C206 4
C205 1000
R209 1.8K
C210 1μF
R204 47
R203 330
C207 12
R202 5.1K
C204 .15μF
C202 1000
L202 10T
C201 1μF
L201 10T
C3 2200
L3 10T
C2 2200
L2 10T
-15
50 MHz DEMOD INPUT
C12 6.8
+15
R1 9.1K
R2 5.1K
IC1 MC14011B
+5
IC304 MC14011B
R329 20K
R328 100K
C318 1μF
CR302
C319 1000
CR303
C320 1000
R326 11.3K
R331 20K
R330 100K
R332 1K
C321 1μF

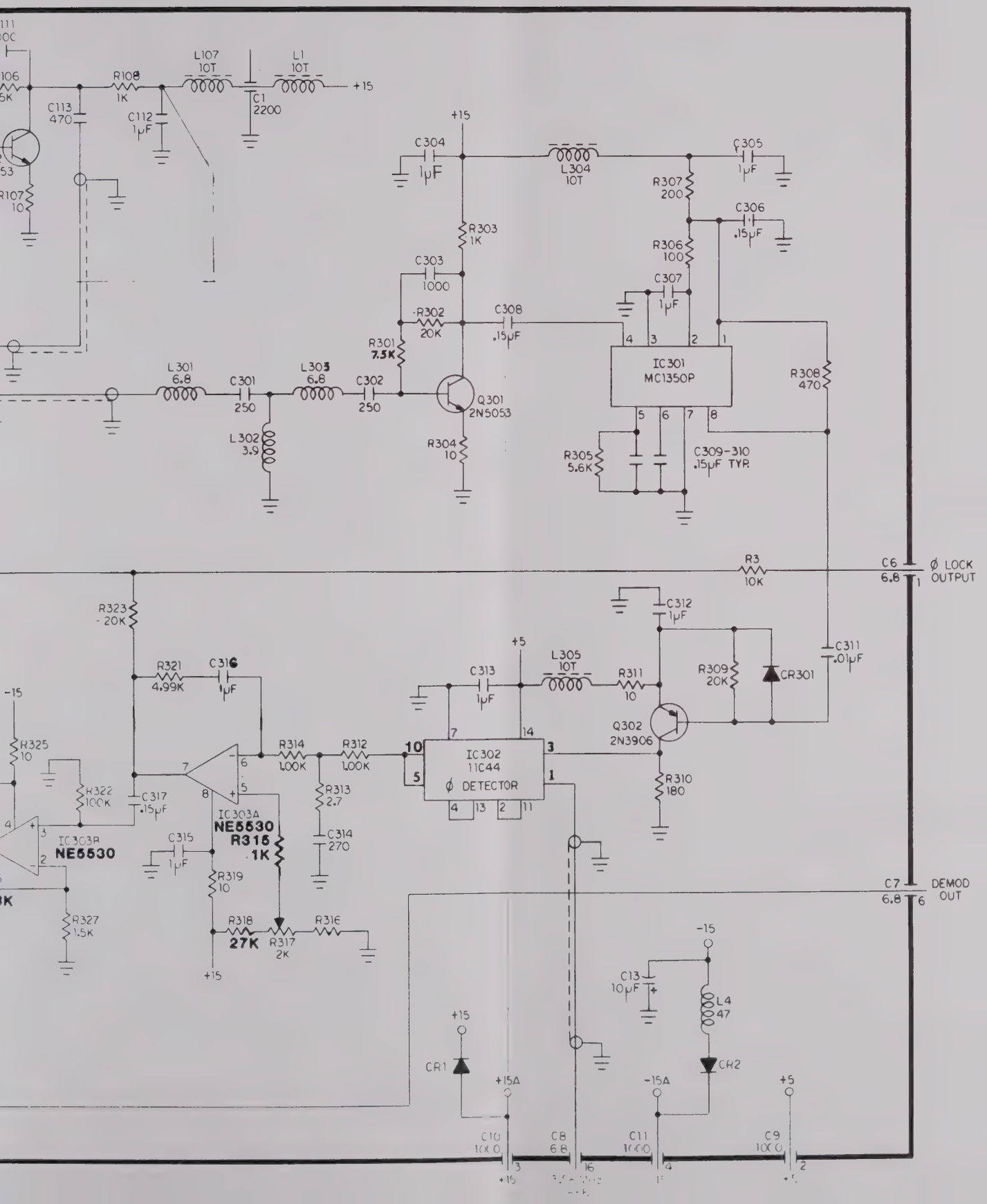
R108 1K
L107 10T
L1 10T
+15
C113 470
C112 1μF
C1 2200
R107 10
C304 1μF
L304 10T
C305 1μF
R307 200
C306 .15μF
R303 1K
R306 100
C303 1000
C307 1μF
R302 20K
C308 .15μF
R301 7.5K
IC301 MC1350P
R308 470
L301 6.8
C301 250
L303 6.8
C302 250
Q301 2N5053
L302 3.9
R304 10
R305 5.6K
C309-310 .15μF TYP
R3 10K
C6 6.8
Ø LOCK OUTPUT
R323 20K
C312 1μF
C311 .01μF
R321 4.99K
C316 1μF
+5
C313 1μF
L305 10T
R311 10
R309 20K
CR301
Q302 2N3906
R325 10
R322 100K
C317 .15μF
R314 100K
R312 100K
IC302 11C44 Ø DETECTOR
R313 2.7
R310 180
IC303A NE5530
IC303B NE5530
C315 1μF
R315 1K
C314 270
R319 10
C7 6.8
DEMOD OUT
R327 1.5K
R318 27K
R317 2K
R316
-15
C13 10μF
L4 47
CR1
CR2
+15A
-15A
+5
C10 100
C8 68
C11 100
C9 100

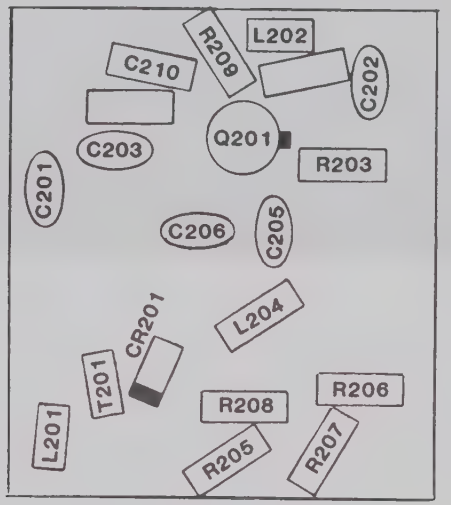
R209
L202
C210
C202
Q201
C203
R203
C201
C205
C206
L204
CR201
T201
R206
R208
L201
R205
R207

1218-00-0433

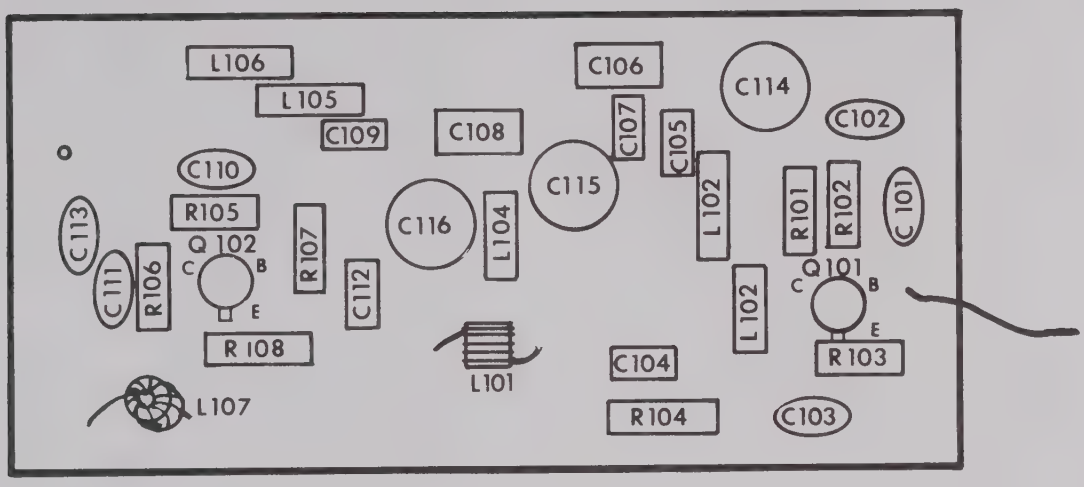
L106
L105
C109
C108
C106
C107
C105
C114
C102
C110
C115
L102
R101
R102
C101
C113
R105
Q 102
C
B
E
R107
C116
L104
C111
R106
C112
L102
Q101
C
B
E
R 108
L101
C104
R 103
L107
R104
C103

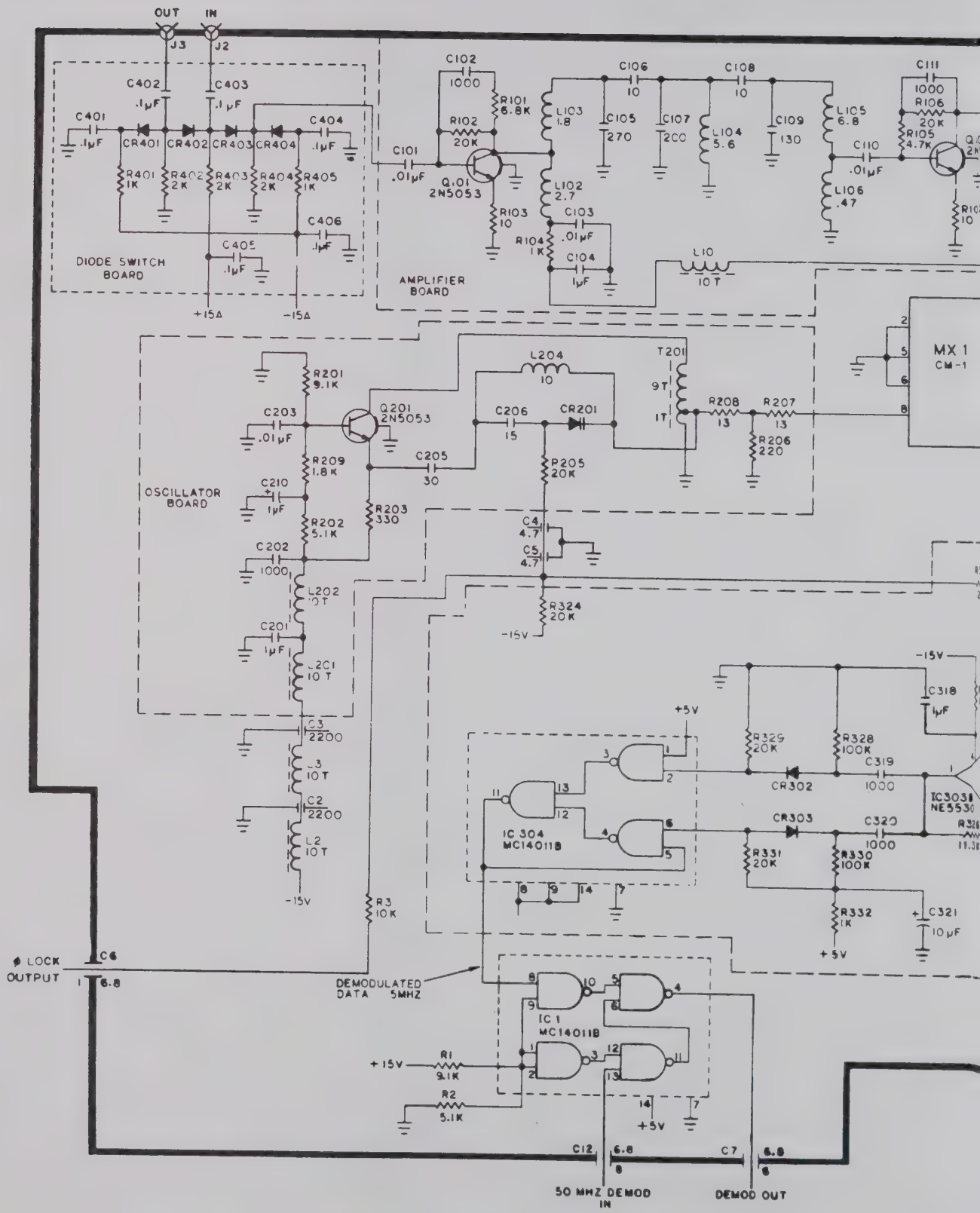
OUT
IN
J3
J2
C402
.1μF
C403
.1μF
C401
.1μF
CR401
CR402
CR403
CR404
C404
.1μF
R401
1K
R402
2K
R403
2K
R404
2K
R405
1K
C406
.1μF
C405
.1μF
DIODE SWITCH BOARD
+15Δ
-15Δ
C102
1000
R101
6.8K
R102
20K
C101
.01μF
Q.01
2N5053
R103
10
L103
1.8
L102
2.7
C103
.01μF
R104
1K
C104
1μF
C106
10
C105
270
C107
200
C108
10
L104
5.6
C109
130
L105
6.8
C110
.01μF
L106
.47
C111
1000
R106
20K
R105
4.7K
AMPLIFIER BOARD
L10
10 T
MX 1
CM-1
L204
10
T201
9T
1T
R208
13
R207
13
R206
220
C206
15
CR201
C205
30
R205
20K
R201
9.1K
C203
.01μF
Q201
2N5053
R209
1.8K
C210
1μF
R202
5.1K
R203
330
C202
1000
L202
10T
C201
1μF
L201
10 T
OSCILLATOR BOARD
C4
4.7
C5
4.7
R324
20K
-15V
C3
2200
L3
10T
C2
2200
L2
10T
-15V
R3
10K
C318
1μF
+5V
R329
20K
R328
100K
C319
1000
CR302
IC3038
NE5530
IC 304
MC14011B
CR303
C320
1000
R331
20K
R330
100K
R332
1K
C321
10μF
+5V
C6
6.8
φ LOCK
OUTPUT
DEMODULATED
DATA 5MHZ
IC 1
MC14011B
+15V
R1
9.1K
R2
5.1K
+5V
C12
6.8
C7
6.8
50 MHZ DEMOD
IN
DEMOD OUT

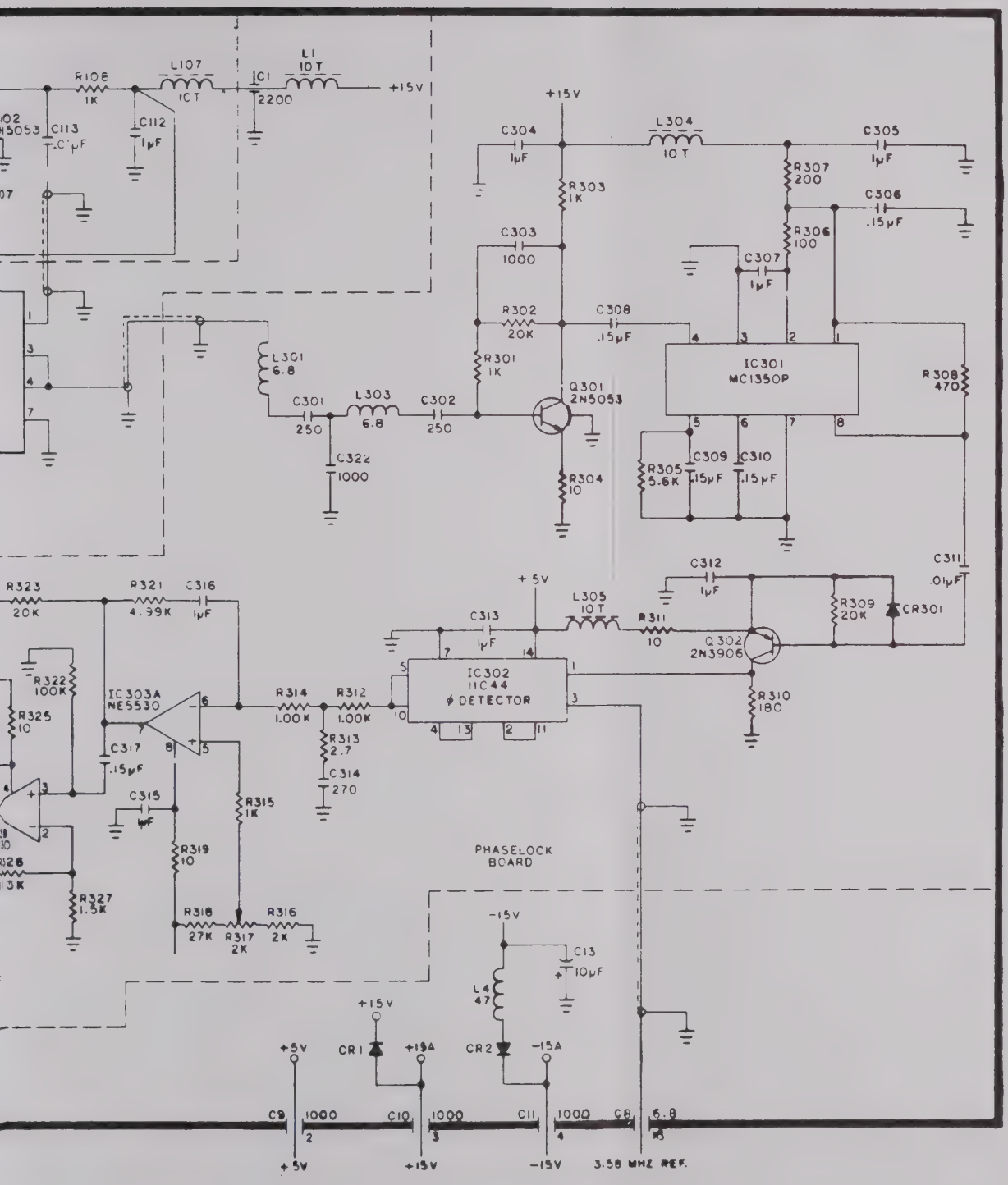
R108
1K
L107
10 T
C1
2200
L1
10 T
+15V
C112
1μF
C113
.01μF
C304
1μF
L304
10 T
C305
1μF
R307
200
C306
.15μF
R303
1K
C303
1000
R306
100
C307
1μF
R302
20K
C308
.15μF
L301
6.8
C301
250
L303
6.8
C302
250
C322
1000
R301
1K
Q301
2N5053
IC301
MC1350P
R308
470
R305
5.6K
C309
.15μF
C310
.15μF
R304
10
C311
.01μF
C312
1μF
R323
20K
R321
4.99K
C316
1μF
+5V
C313
1μF
L305
10 T
R311
10
R309
20K
CR301
Q302
2N3906
R322
100K
R325
10
IC303A
NE5530
R314
1.00K
R312
1.00K
IC302
11C44
φ DETECTOR
R310
180
C317
.15μF
R313
2.7
C314
270
C315
1μF
R315
1K
R319
10
R327
1.5K
R318
27K
R317
2K
R316
2K
PHASELOCK
BOARD
-15V
C13
10μF
L4
47
+15V
+5V
CR1
+15A
CR2
-15A
C9
1000
C10
1000
C11
1000
C12
5.8
+5V
+15V
-15V
3.58 MHZ REF.

INVERTI
COMBIN
PROGRA

SCHEMATIC — M113
PILOT CARRIER NOTCHES

REV____

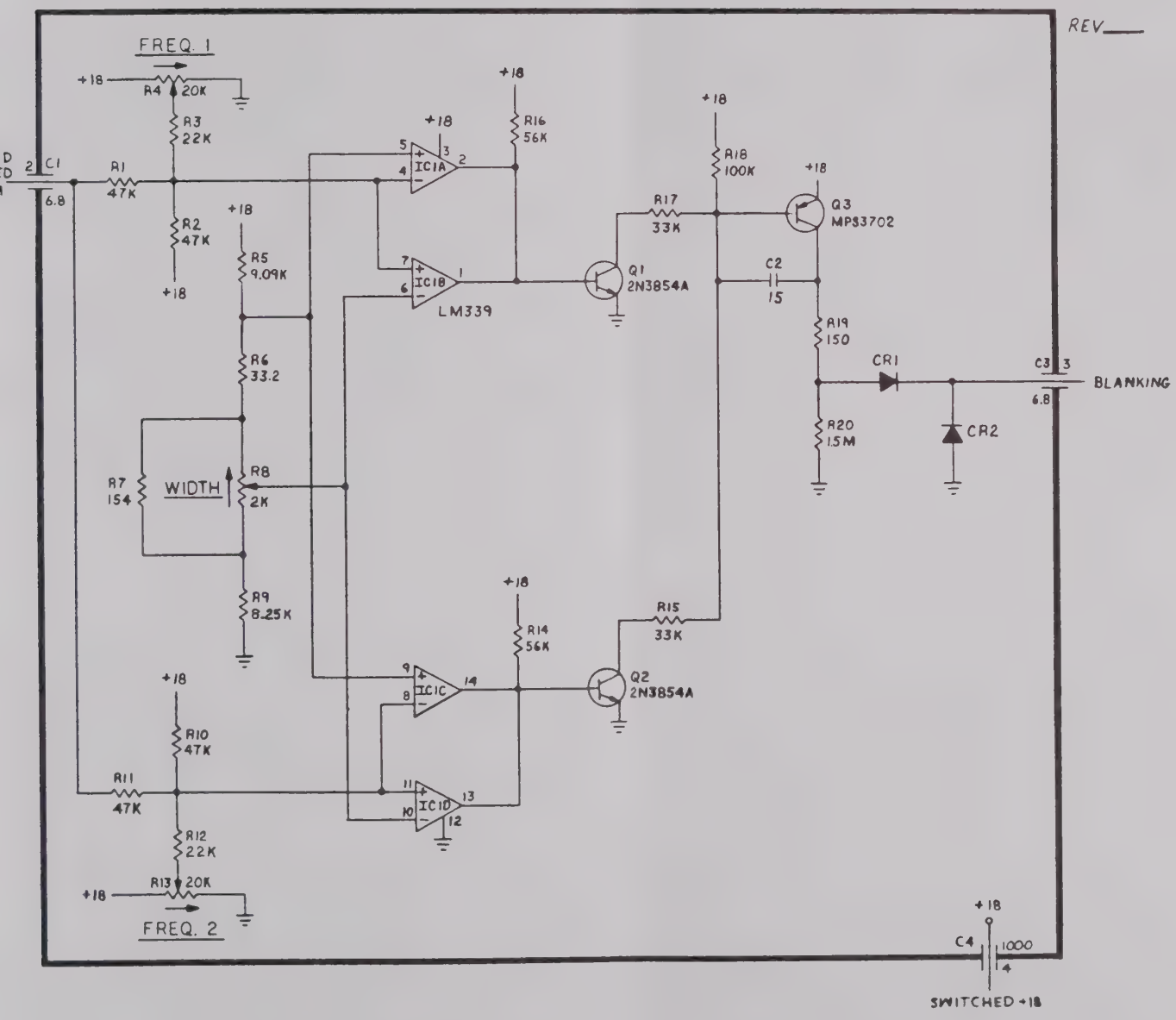

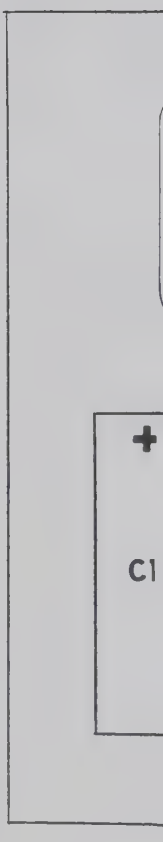
+
C1

Z1007

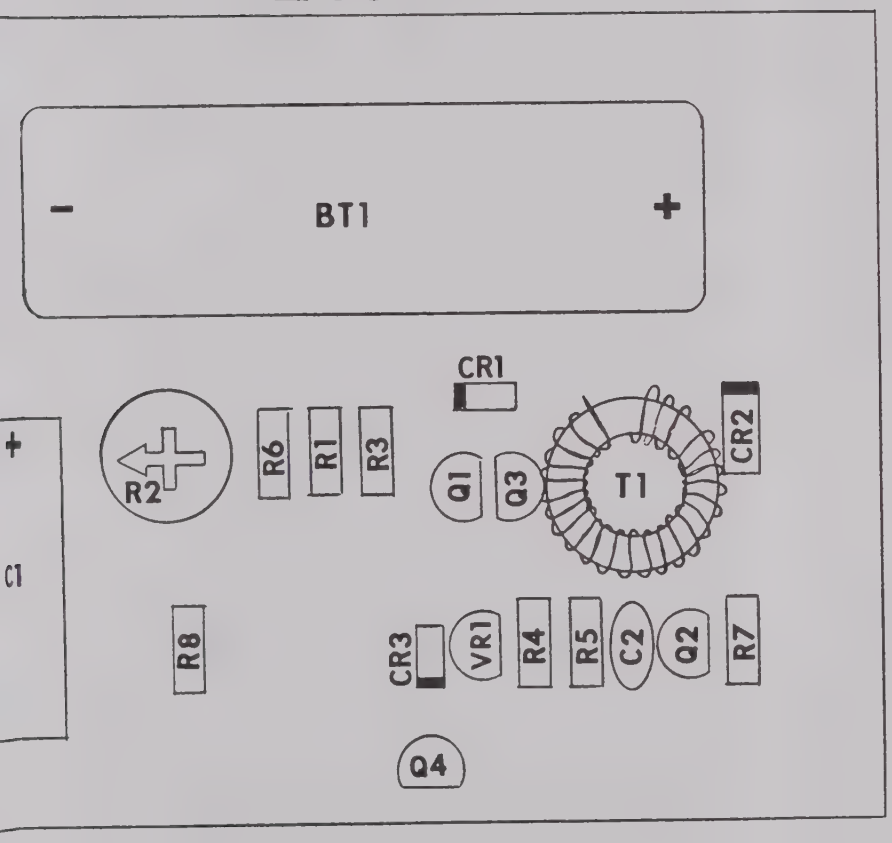

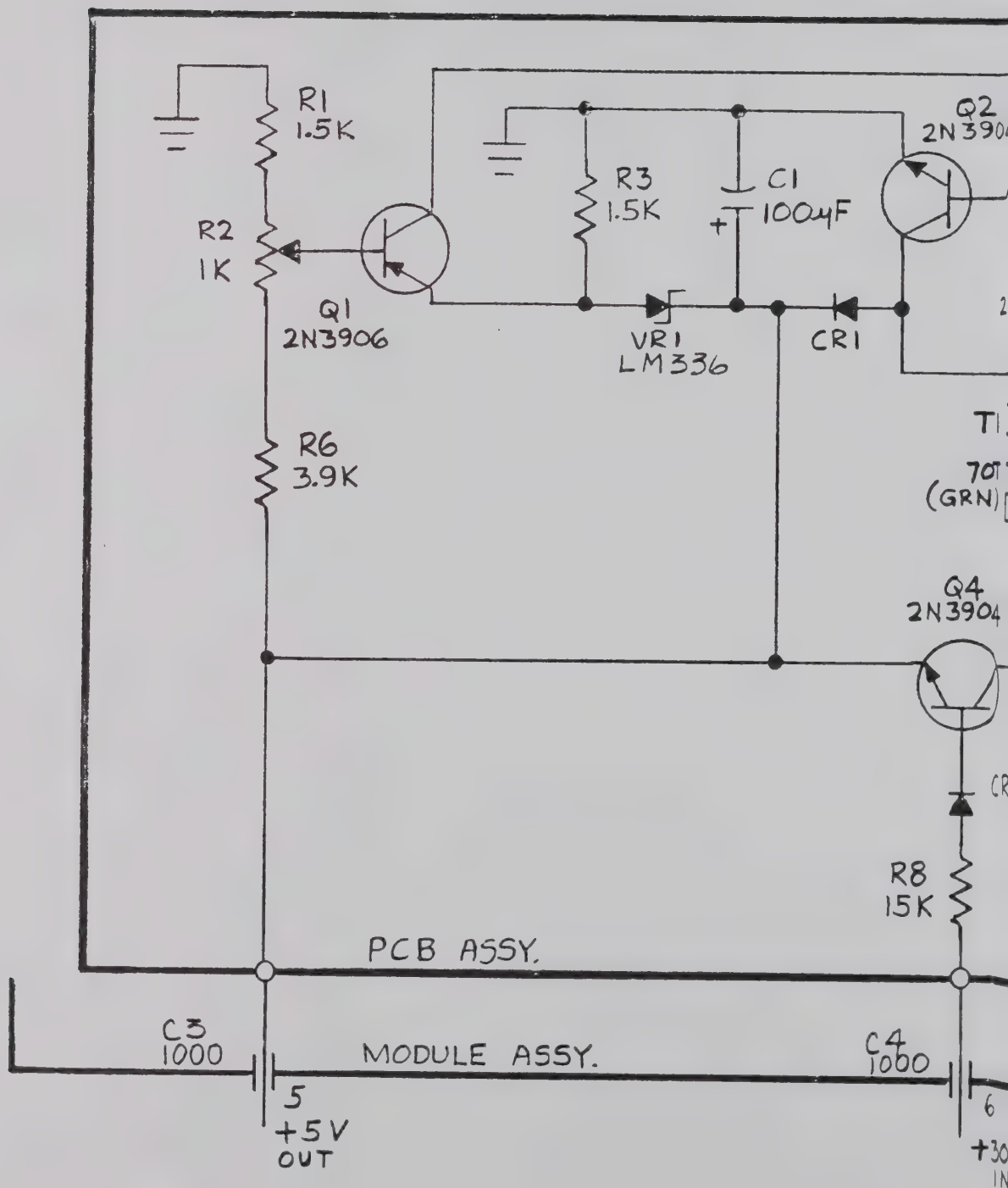
R1
1.5K
R2
1K
Q1
2N3906
R3
1.5K
C1
100μF
VR1
LM336
CR1
Q2
2N390
R6
3.9K
Q4
2N3904
R8
15K
PCB ASSY.
C3
1000
MODULE ASSY.
C4
1000
5
+5V
OUT
6
(GRN)

M152
BATTERY BACK-UP

REV

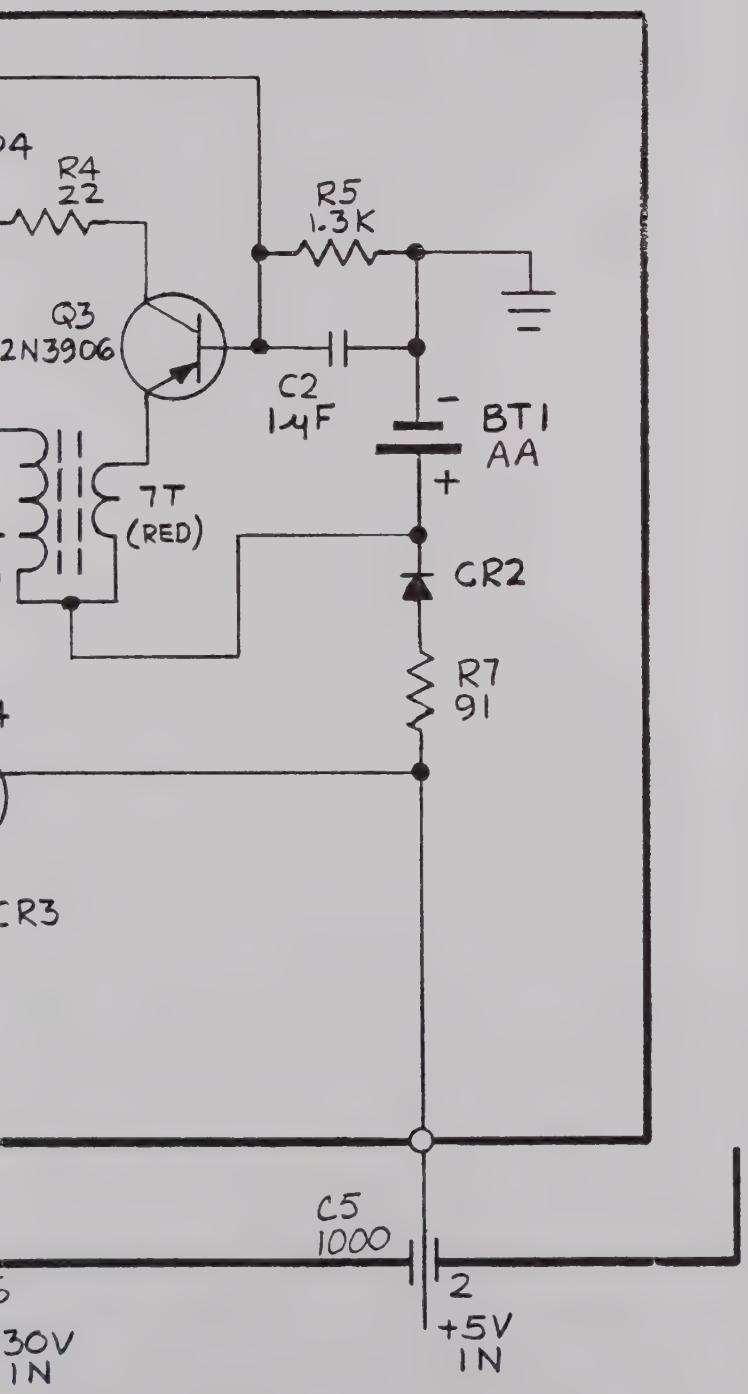

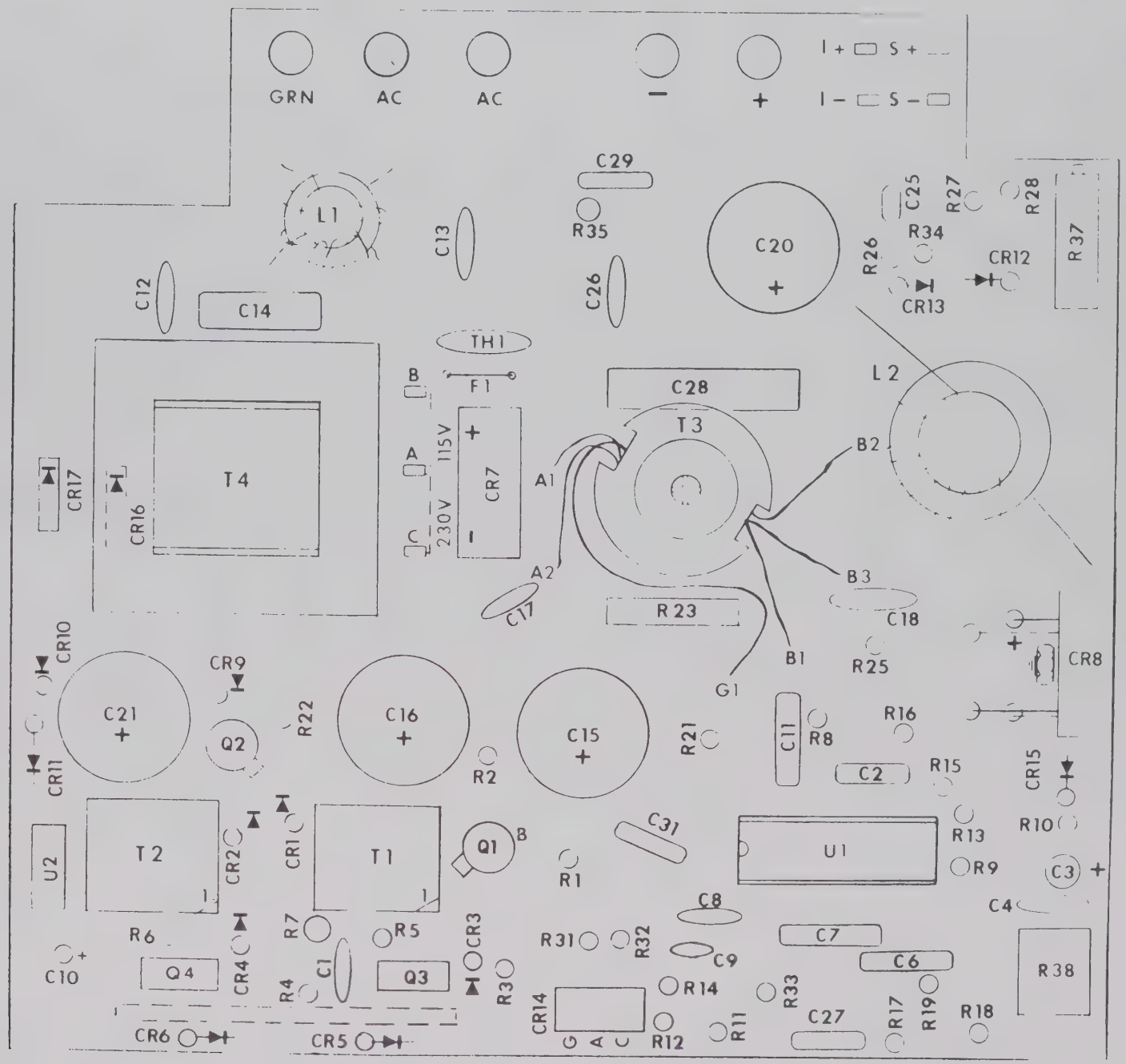
GRN
AC
AC
−
+
I + S +
I − S −
L1
C13
C29
R35
C20
C25
R27
R28
R37
R34
R26
CR12
CR13
C12
C14
C26
TH1
F1
B
A
C
115V
230V
CR7
T4
CR17
CR16
C28
T3
L2
B2
A1
A2
C17
R23
B3
C18
B1
R25
G1
CR8
CR10
CR9
C21
Q2
R22
C16
C15
R21
C11
R8
R16
C2
R15
CR15
CR11
R2
T2
CR2
CR1
T1
Q1
B
C31
U1
R13
R10
R9
C3
U2
R1
C4
C8
R6
R7
R5
CR3
R31
R32
C7
C9
C6
R38
C10
Q4
CR4
C1
Q3
R3
R14
R33
R4
CR14
R12
R11
C27
R17
R19
R18
CR6
CR5
G A C

BC3
BATTERY CHARGER

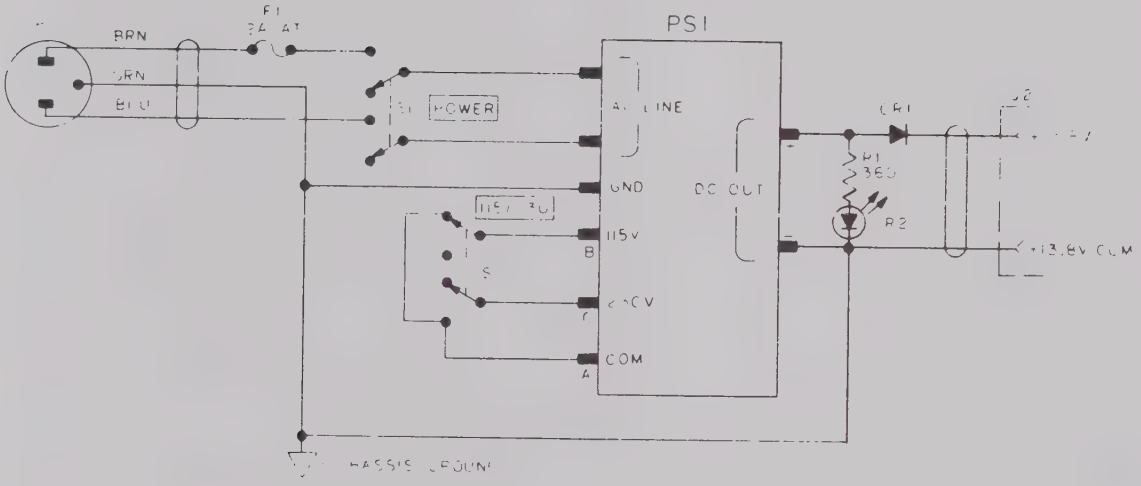

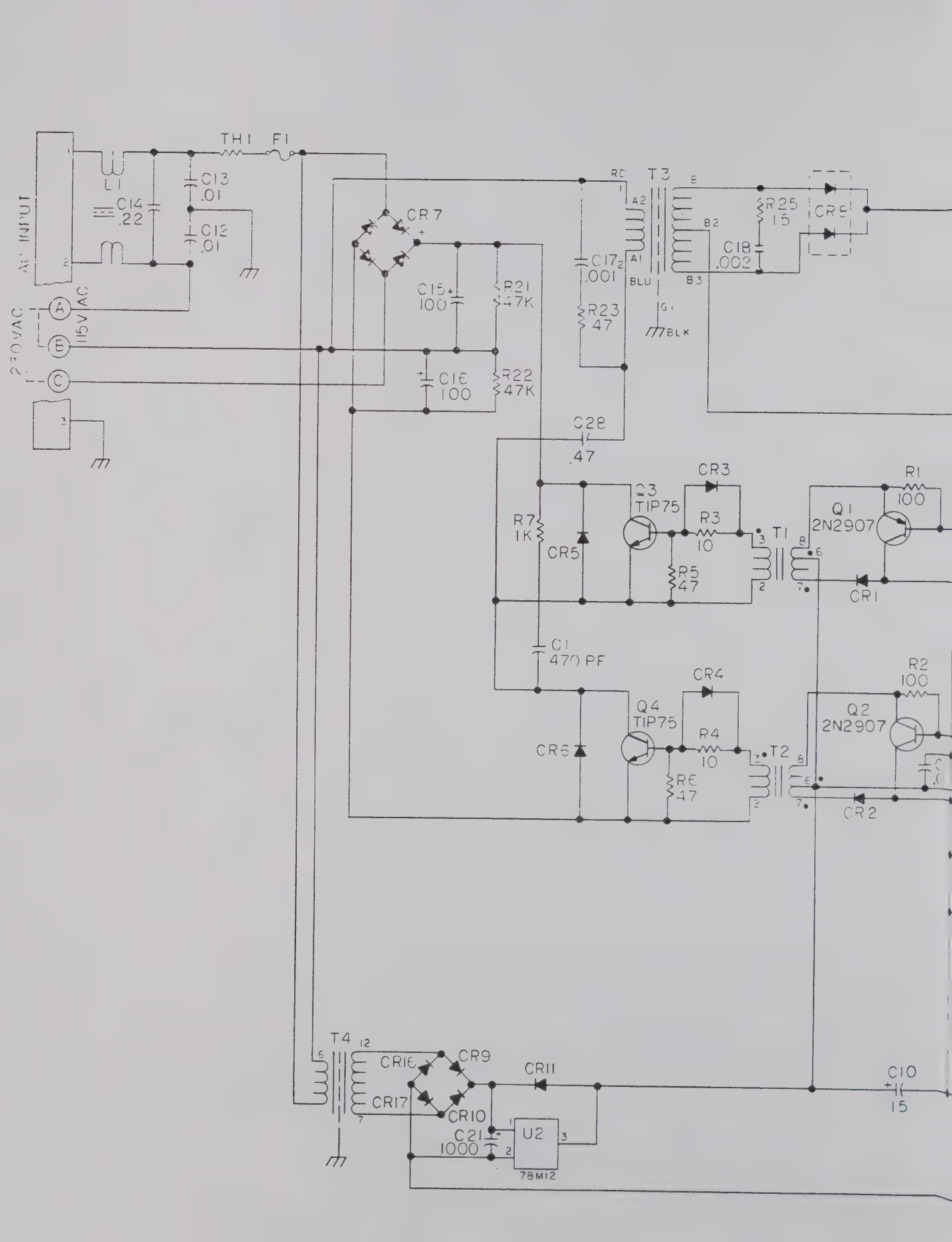
AC INPUT
230VAC
115V AC
TH1
F1
L1
C14 .22
C13 .01
C12 .01
CR7
C15 100
R21 47K
C16 100
R22 47K
C17 .001
R23 47
T3
A2
A1
BLU
B2
B3
BLK
C18 .002
R25 15
CR8
C28 .47
CR3
Q3 TIP75
R7 1K
CR5
R3 10
R5 47
T1
R1 100
Q1 2N2907
CR1
C1 470 PF
CR4
Q4 TIP75
CR6
R4 10
R6 47
T2
R2 100
Q2 2N2907
CR2
T4
CR16
CR9
CR17
CR10
CR11
C21 1000
U2
78M12
C10 15

SCHEMATIC
BC-3 PCB

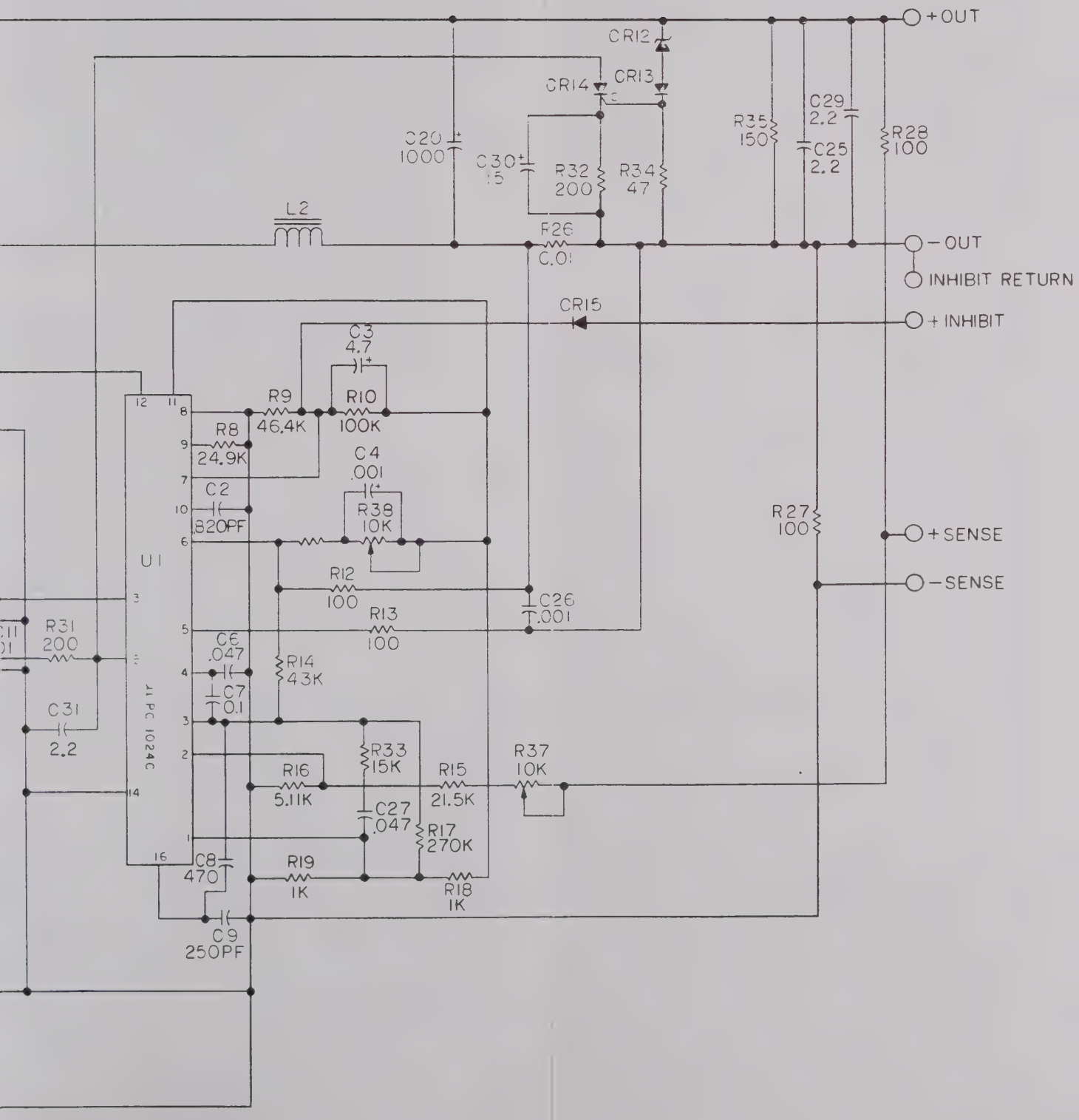

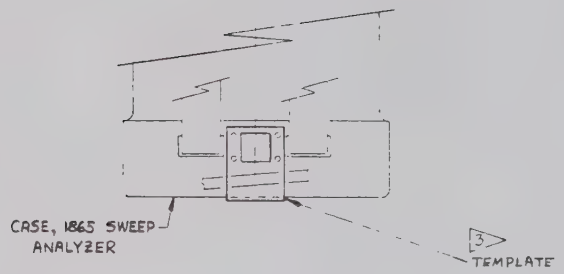

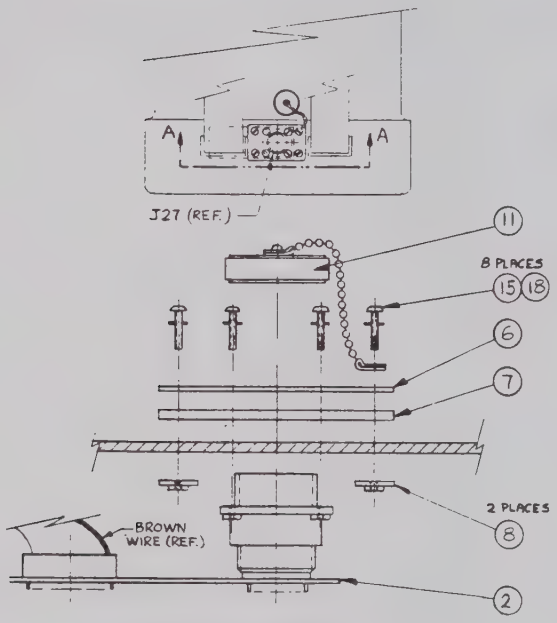

EXPLODED SECTION A-A 4
SCALE 1:1

INSTALLATION PROCEDURE, CASE MODIFICATION & ASSEMBLY

J22 (REF.

1. REMOVE (16) SCREWS THAT ATTACH FRONT PANEL OF CHASSIS ASSEMBLY TO CASE.

2. REMOVE CHASSIS ASSEMBLY FROM CASE.

3 CENTER TEMPLATE 1414-00-0001 BETWEEN (2) COVER STRAPS & ATTACH TO CASE AS SHOWN USING MASKING TAPE OR EQUIVALENT. DRILL (4) .113 DIA. HOLES, SCRIBE & CUT OUT SQUARE CONNECTOR OPENING.

4 REMOVE TEMPLATE & ASSEMBLE AS SHOWN IN SECTION A-A.

BLACK RED

5 REMOVE RELEASE LINERS FROM (2) RIBBON CABLE CLAMPS (PART OF ITEM #2) & DRESS CABLE AT SLIGHT ANGLE TO LEFT REAR SIDE OF CHANNEL SO THAT .50 DIM. CAN BE HELD WITHOUT DISTORTING

6 REMOVE FOAM BLOCK FROM LEFT SIDE OF REAR PLATE. PRESS RIBBON CABLE TO STICKY SURFACE OF REAR PLATE.

7 SEPARATE & ROUTE CONNECTOR BETWEEN FOAM & REAR PLATE. REPLACE FOAM BLOCK REMOVED IN STEP 6.

8 ATTACH LABEL (ITEM #9) DIRECTLY BELOW & CENTERED ON EXISTING MODEL/SERIAL NUMBER PLATE.

15 P10 (REF.)

4P CARD Z501 (REF.

EXISTING MODEL/SERIAL NUMBER PLATE (REF.)

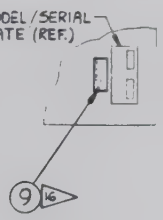

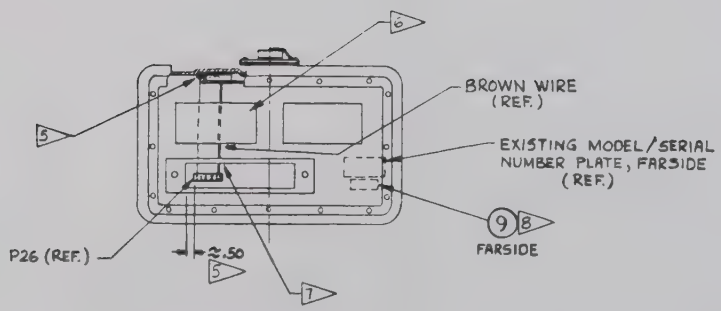

VIEW INTO CASE WITH CHASSIS ASSY. REMOVED

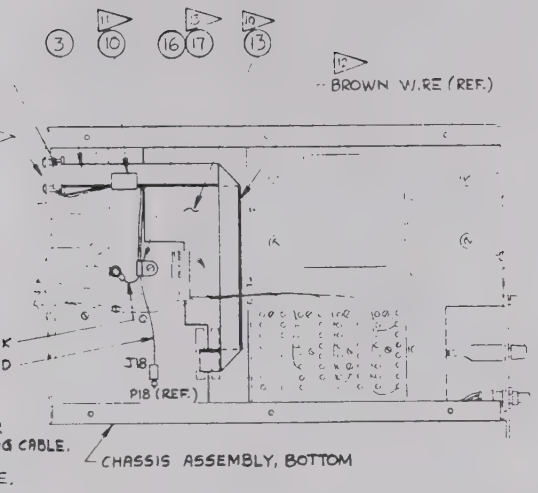

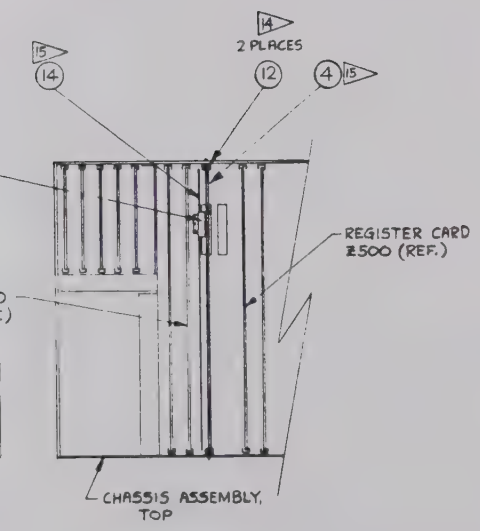

INSTALLATION PROCEDURE, CHASSIS MODIFICATION & ASSEMBLY

9. REMOVE (17) SCREWS ON TOP, (9) SCREWS ON BOTTOM & REMOVE (2) COVERS. REMOVE COVER PLATE FROM 'OPTION' OPENING ON REAR PLATE. RETURN PLATE, (2) WASHERS & (2) HEX. NUTS TO STOCK. ATTACH PCB END OF RIBBON CABLE ASSEMBLY (ITEM #3) TO REAR PLATE AS SHOWN USING (2) SCREWS THAT PREVIOUSLY HELD COVER PLATE.

10. SLIDE INSULATOR (ITEM # 13) INTO PLACE AS SHOWN. (UNDER EXISTING WIRING HARNESS & CONNECTORS)

11. ATTACH CABLE CLAMP (ITEM # 10) TO RED & BLACK WIRES AND RIBBON CABLE (ITEM #3). REMOVE RELEASE LINER & ATTACH AS SHOWN.

12. FOLD & ROUTE RIBBON CABLE EXACTLY AS SHOWN. NOTE LOCATION OF BROWN WIRE. INSERT CONNECTOR END THRU OPENING IN PCB AS SHOWN.

13. REMOVE #4-40 x 1/4 LG SCREW & ATTACH CABLE CLAMP (ITEM # 17) USING #4-40 x 5/16 LG SCREW (ITEM # 16). RETURN ORIGINAL #4-40 x 1/4 LG SCREW TO STOCK. ATTACH J18 TO P18 ON PCB (RED WIRE). REMOVE SCREW ON GROUND PLANE OF PCB & ATTACH TERMINAL LUG OF BLACK WIRE AS SHOWN.

14. TURN CHASSIS ASSEMBLY OVER. ATTACH (2) CARD GUIDES (ITEM # 12) IN LOCATIONS SHOWN.

15. INSERT INSULATOR (ITEM # 14), CARD READER OPTION PCB (ITEM # 4), & ATTACH CONNECTOR END OF RIBBON CABLE ASSEMBLY TO J10 OF PCB AS SHOWN. NOTE ORDER (BACK TO FRONT).
    1. MP PCB
    2. RIBBON CABLE
    3. INSULATOR
    4. CARD READER OPTION PCB
    5. OPEN
    6. REGISTER PCB

16. ATTACH LABEL (ITEM # 9) DIRECTLY BELOW & CENTERED ON EXISTING MODEL / SERIAL NUMBER PLATE.

17. REASSEMBLE TOP & BOTTOM COVERS. REASSEMBLE CHASSIS ASSEMBLY TO CASE. ATTACH CONNECTOR P26 OF CASE TO J26 OF CHASSIS ASSEMBLY.

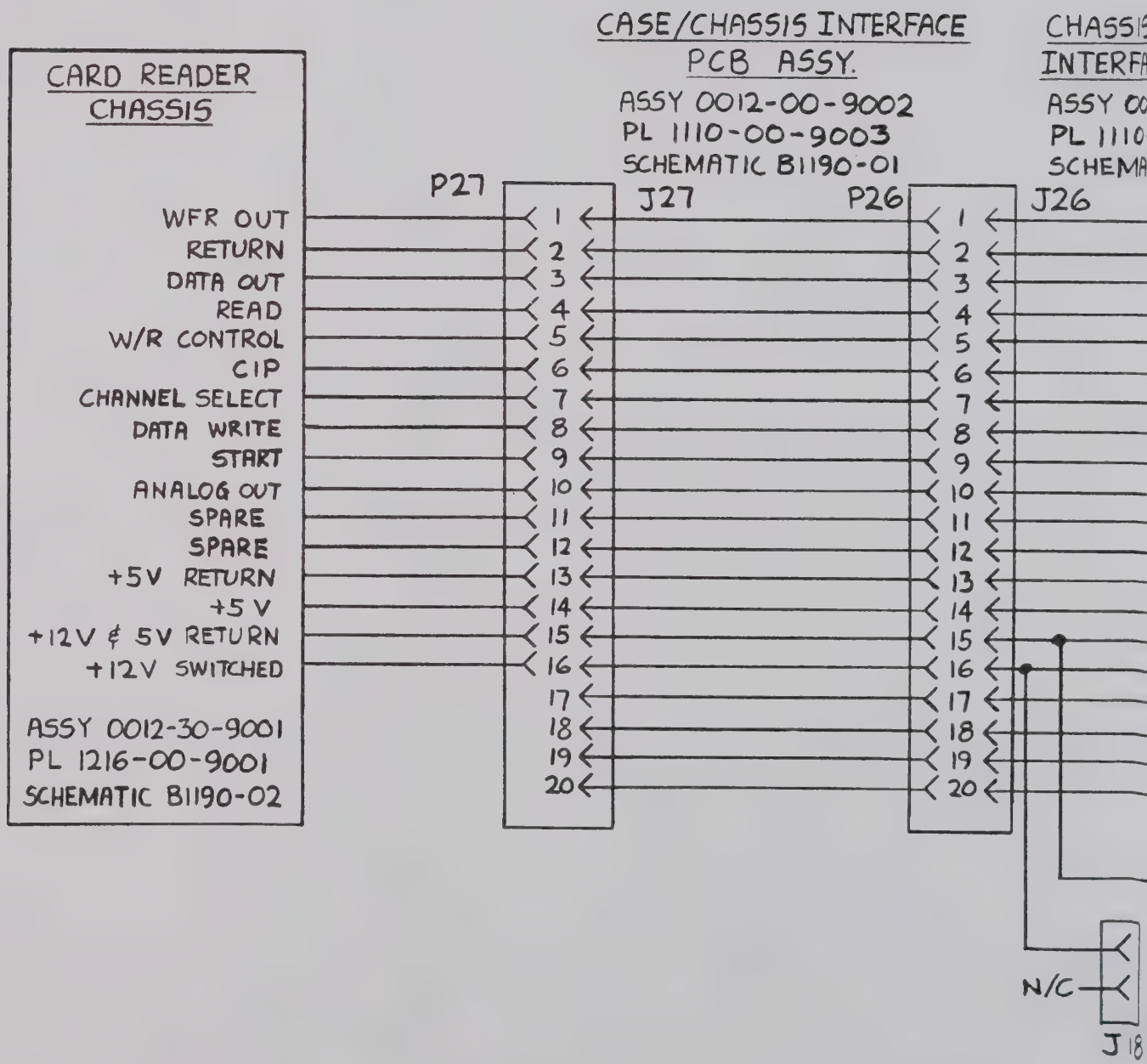
CARD READER CHASSIS
WFR OUT
RETURN
DATA OUT
READ
W/R CONTROL
CIP
CHANNEL SELECT
DATA WRITE
START
ANALOG OUT
SPARE
SPARE
+5V RETURN
+5 V
+12V & 5V RETURN
+12V SWITCHED
ASSY 0012-30-9001
PL 1216-00-9001
SCHEMATIC B1190-02
P27
CASE/CHASSIS INTERFACE PCB ASSY.
ASSY 0012-00-9002
PL 1110-00-9003
SCHEMATIC B1190-01
J27
P26
J26
CHASSIS INTERFA
ASSY 00
PL 1110
SCHEMA
1 2 3 4 5 6 7 8 9 10 11 12 13 14 15 16 17 18 19 20
N/C
J 18

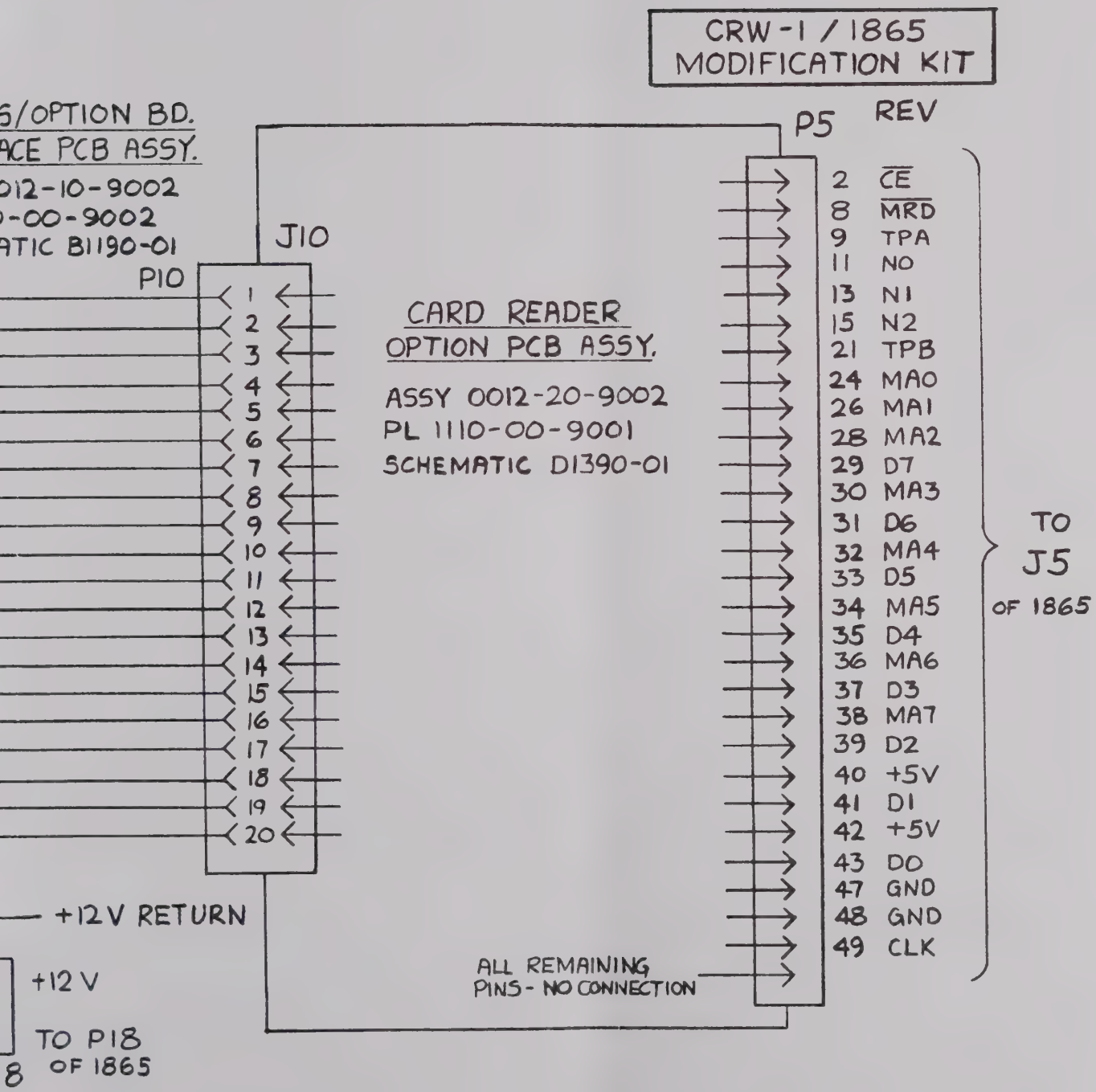
CRW-1 / 1865
MODIFICATION KIT
6/OPTION BD.
ACE PCB ASSY.
012-10-9002
-00-9002
ATIC B1190-01
J10
P10
1
2
3
4
5
6
7
8
9
10
11
12
13
14
15
16
17
18
19
20
CARD READER
OPTION PCB ASSY.
ASSY 0012-20-9002
PL 1110-00-9001
SCHEMATIC D1390-01
P5
REV
2 CE
8 MRD
9 TPA
11 NO
13 N1
15 N2
21 TPB
24 MA0
26 MA1
28 MA2
29 D7
30 MA3
31 D6
32 MA4
33 D5
34 MA5
35 D4
36 MA6
37 D3
38 MA7
39 D2
40 +5V
41 D1
42 +5V
43 DO
47 GND
48 GND
49 CLK
TO
J5
OF 1865
ALL REMAINING
PINS - NO CONNECTION
+12V RETURN
+12 V
TO P18
OF 1865
8

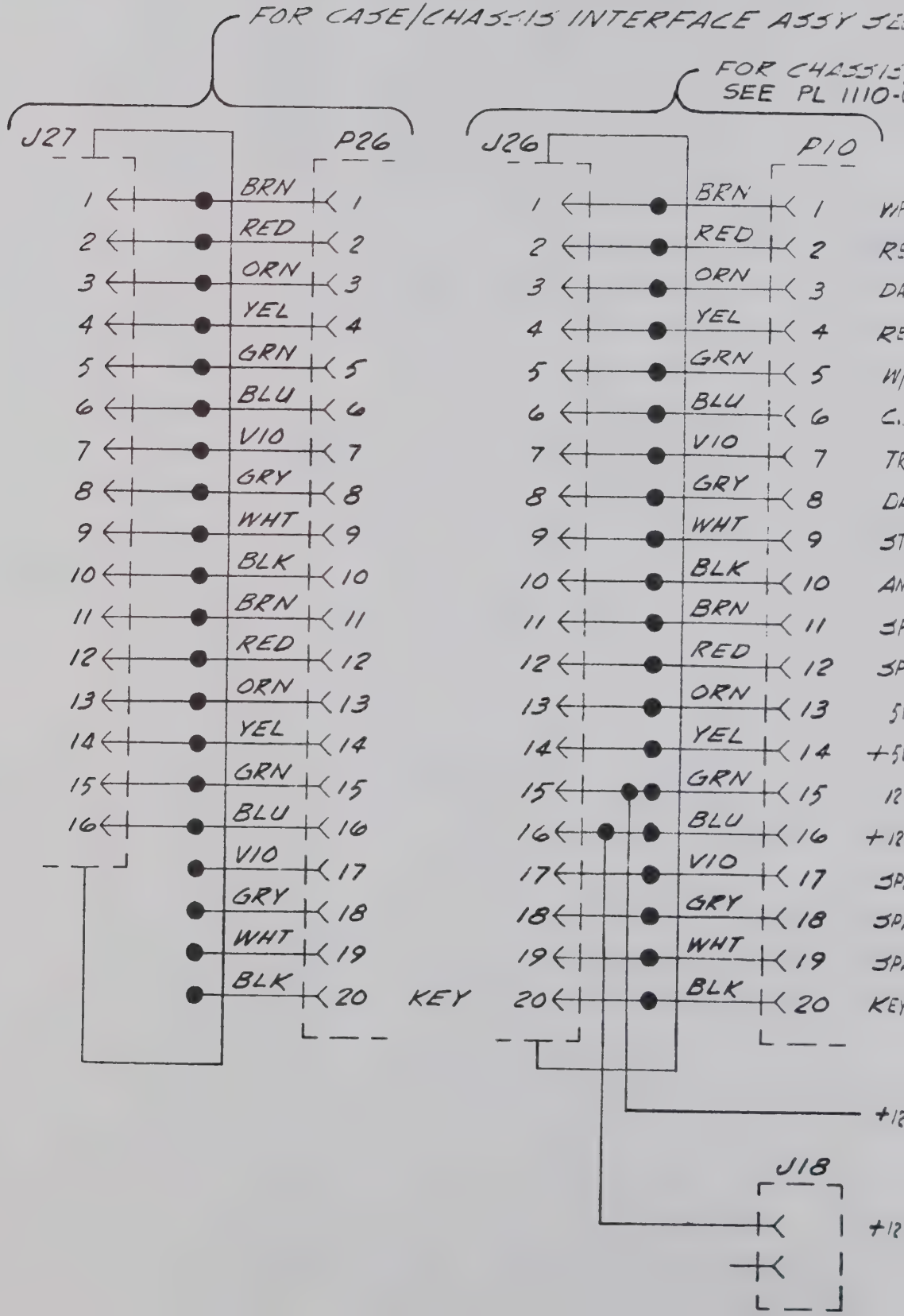
FOR CASE/CHASSIS INTERFACE ASSY SE
FOR CHASSIS
SEE PL 1110-
J27
P26
J26
P10
1 BRN 1
2 RED 2
3 ORN 3
4 YEL 4
5 GRN 5
6 BLU 6
7 VIO 7
8 GRY 8
9 WHT 9
10 BLK 10
11 BRN 11
12 RED 12
13 ORN 13
14 YEL 14
15 GRN 15
16 BLU 16
17 VIO 17
18 GRY 18
19 WHT 19
20 BLK 20
KEY
+12
J18
+12

CE PL1110-00-9003

E/OPTION BD. INTERFACE ASSY
-00-9002

CRW-1 / 1865
INTERFACE

REV

IFR REQ
ETURN
ATA IN
EAD
Y/R
.I.P.
TRK SEL
DATA WRITE
START
ANALOG TEST
SPARE
SPARE
5VDC RET
-5VDC
12VDC RET
+12VDC
SPARE
SPARE
SPARE
KEY

+12VDC RET

+12VDC

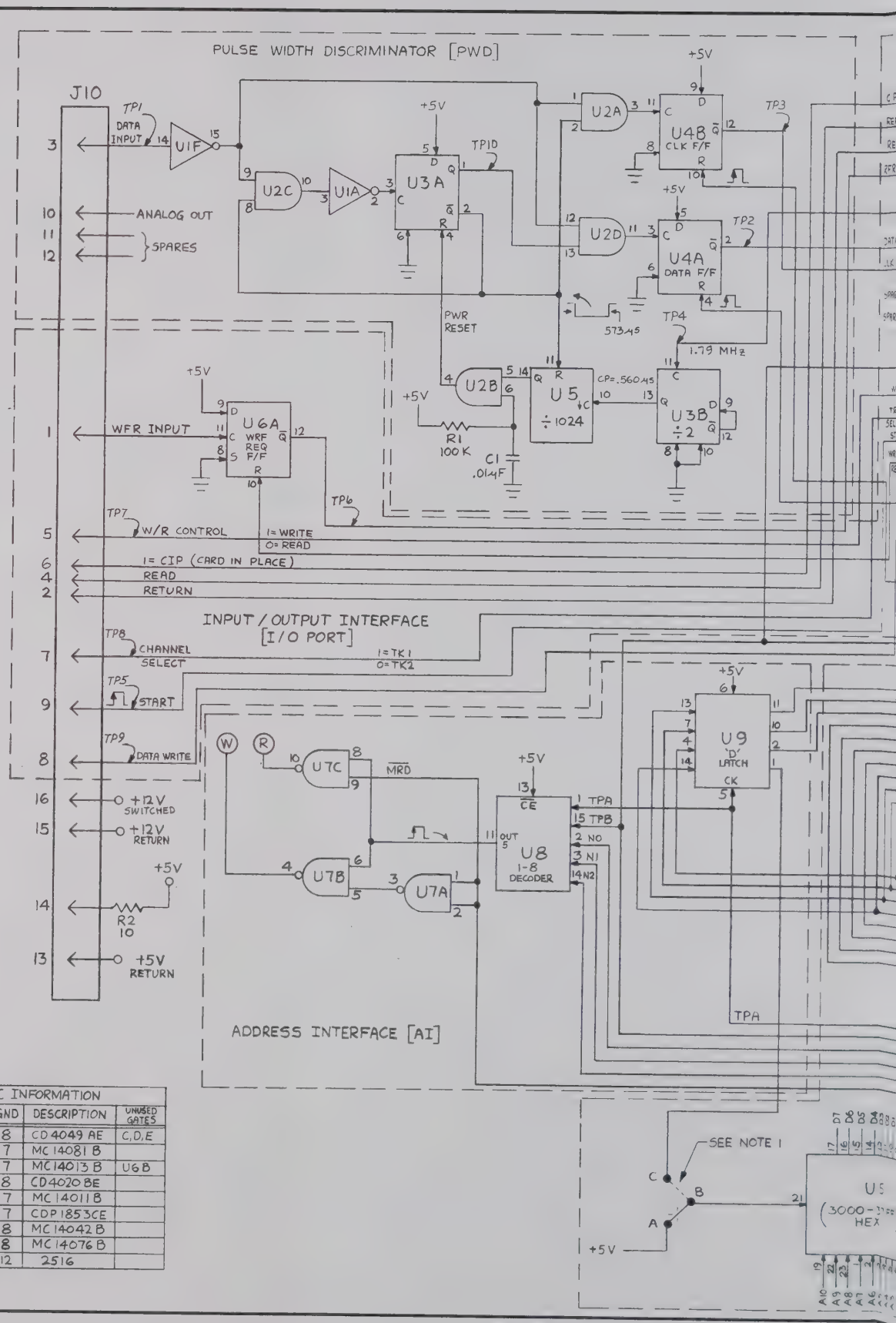

IC INFORMATION				
IC NO.	+5V	GND	DESCRIPTION	UNUSED GATES
U1	1	8	CD 4049 AE	C,D,E
U2	14	7	MC 14081 B	
U3,4,6	14	7	MC 14013 B	U6B
U5	16	8	CD 4020 BE	
U7	14	7	MC 14011 B	
U8	16	7	CDP 1853 CE	
U9	16	8	MC 14042 B	
U10,11,12,13	16	8	MC 14076 B	
U14,15	24	12	2516	

CRW-1 / 1865
CARD READER OPTION BOARD

REV B

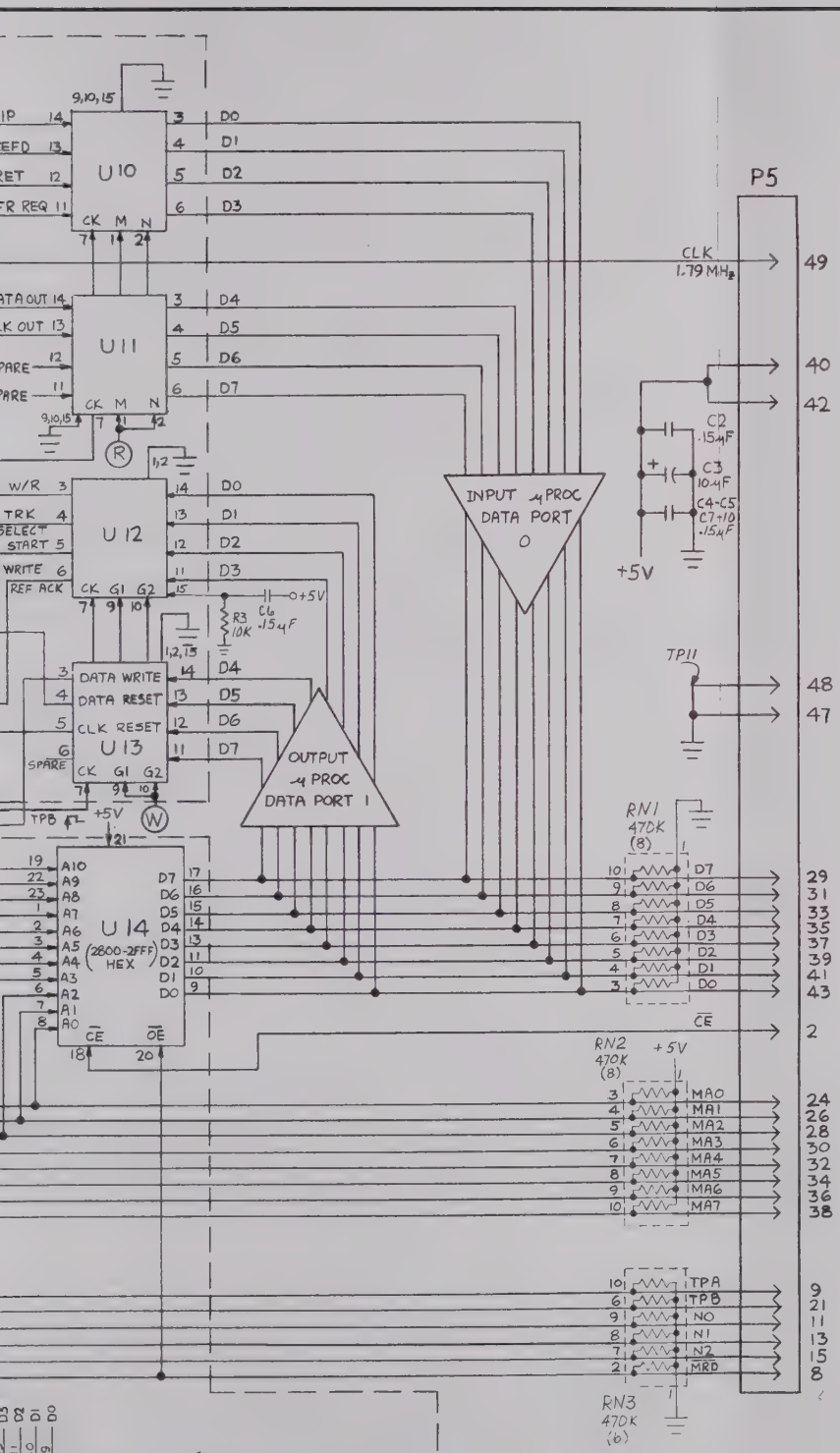

NOTES:

1. FOR FUTURE EXPANSION USE EPROM 2732 (4K x 8) DEVICE. INTERRUPT CONNECTION BETWEEN A & B AND JUMPER FROM B TO C.

REFERENCE DESIGNATIONS	
LAST USED	NOT USED
C10	
J10	J1 THRU J9
P5	P1 THRU P4
R2	
RN3	
TP11	
U15	

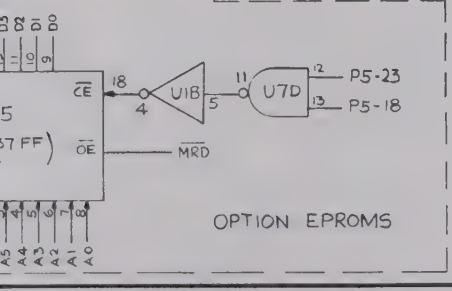

THIS DOCUMENT CONTAINS INFORMATION PROPRIETARY TO WAVETEK. THE INFORMATION IN THIS DOCUMENT IS NOT TO BE USED OR DUPLICATED IN ANY MANNER WITHOUT THE PRIOR APPROVAL IN WRITING OF WAVETEK.

TOLERANCE:
DECIMAL DIM ± .005
FRACTIONAL DIM ± 1/64
ANGLES ± 30'
UNLESS OTHERWISE SPECIFIED

NO	DESCRIPTION	BY
B	ECN 1621	DW
A	ECN C028	DW

REVISION

MATERIAL:

FINISH:

ARTWORK #:

WAVETEK INDIANA

SCHEMATIC DIAGRAM
CARD READER OPTION P.C.B.

DRAWN BY	SCALE	DATE
G.L. RADER	—	10-2-80
CHK'D	DATE	DRAWING NO
		D1390-01
RELEASED BY	DATE	
GRR	11/5/81	

0014-30-9001
800923-2

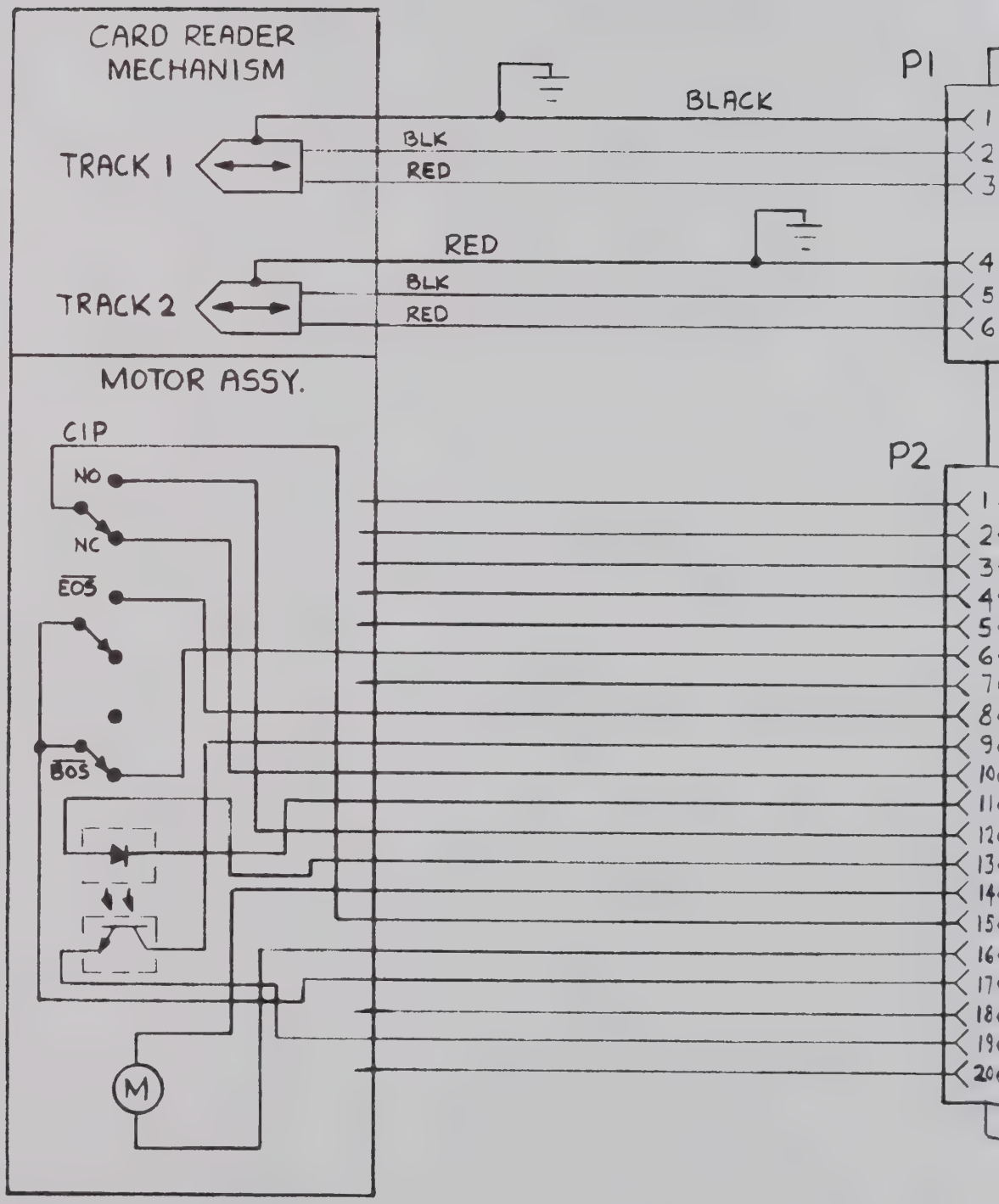
CARD READER MECHANISM
TRACK 1
TRACK 2
BLACK
BLK
RED
RED
BLK
RED
P1
1
2
3
4
5
6
MOTOR ASSY.
CIP
NO
NC
EOS
BOS
M
P2
1
2
3
4
5
6
7
8
9
10
11
12
13
14
15
16
17
18
19
20

MODEL CRW-1
CARD READER
REV

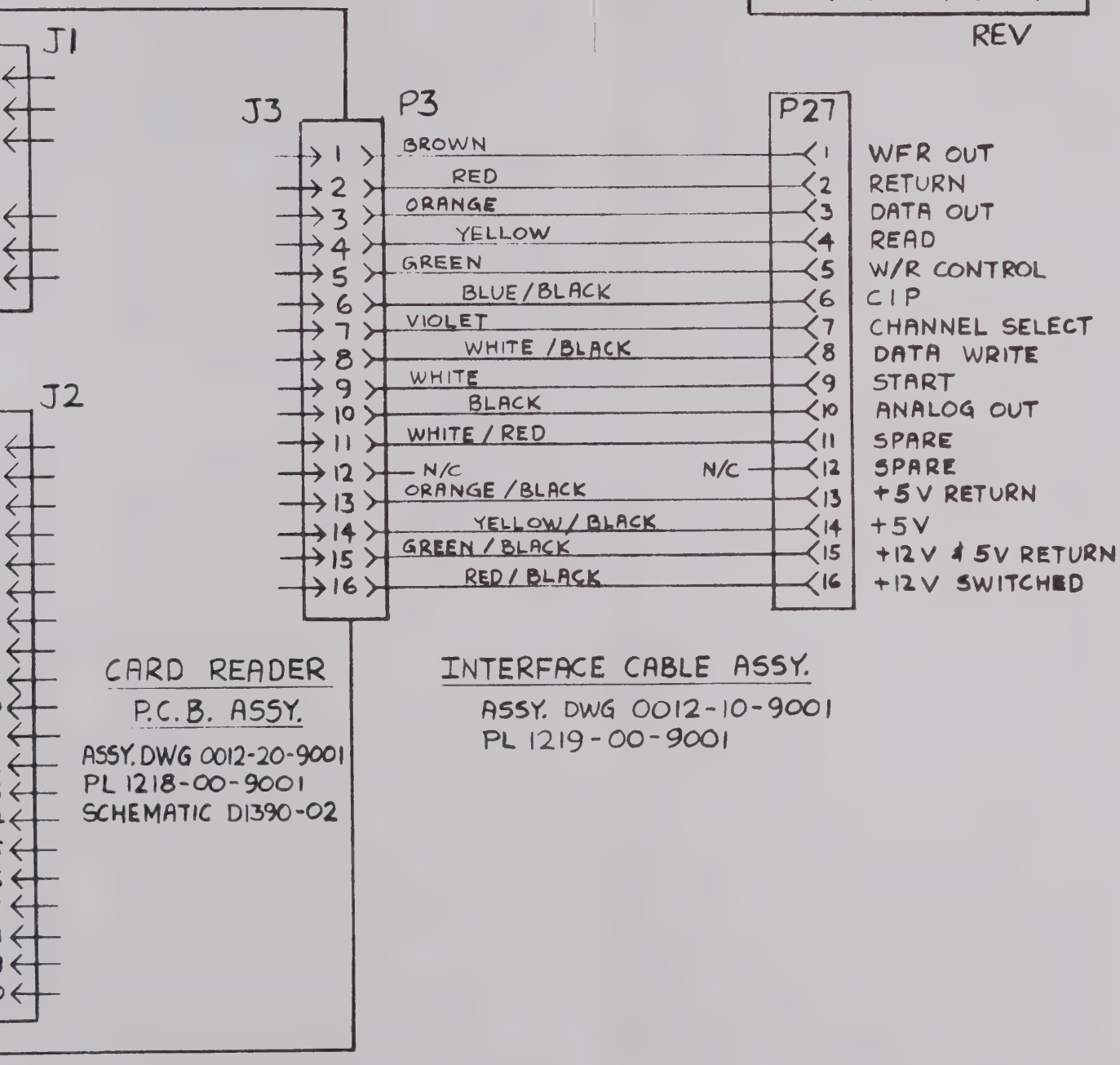

CARD READER
P.C.B. ASSY.

ASSY. DWG 0012-20-9001
PL 1218-00-9001
SCHEMATIC D1390-02

INTERFACE CABLE ASSY.

ASSY. DWG 0012-10-9001
PL 1219-00-9001

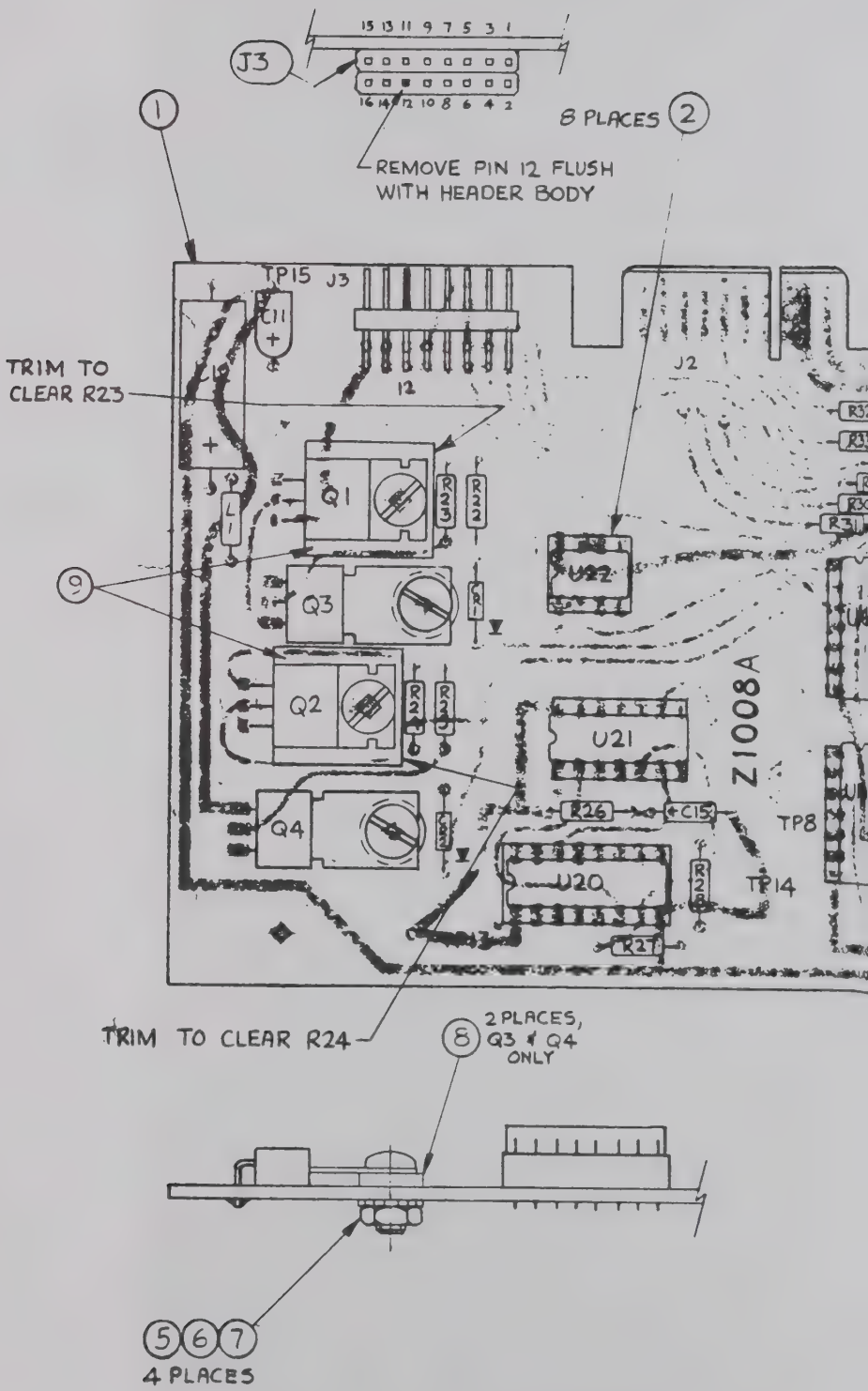

J3
15 13 11 9 7 5 3 1
16 14 12 10 8 6 4 2
8 PLACES
REMOVE PIN 12 FLUSH WITH HEADER BODY
TP15
J3
C11
12
J2
TRIM TO CLEAR R23
Q1
R23
R22
L1
Q3
U22
Q2
U21
Z1008A
Q4
R26
C15
TP8
U20
TP14
R27
TRIM TO CLEAR R24
2 PLACES, Q3 & Q4 ONLY
4 PLACES

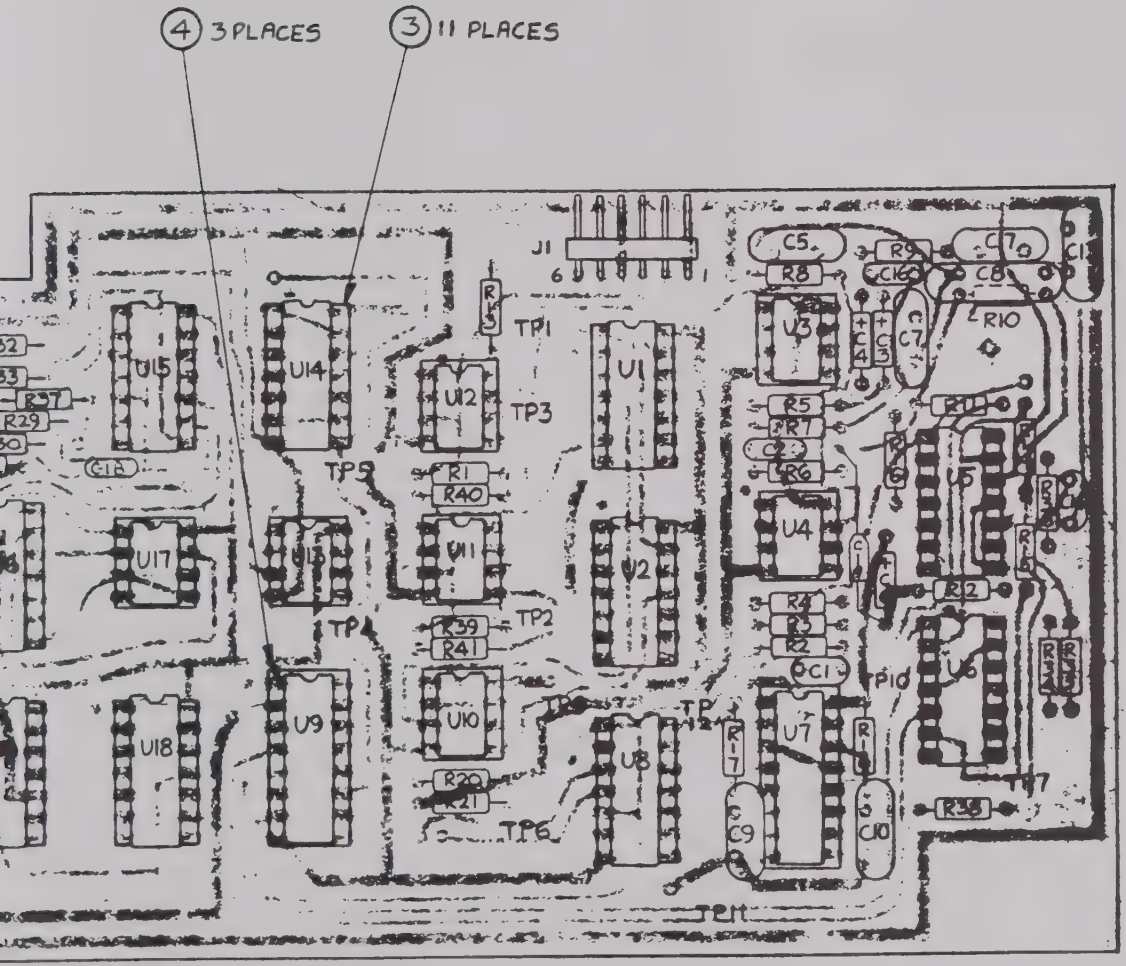

NOTES:

1. MATERIAL: SEE PL 1218-00-9001

REVISIONS			WAVETEK
	ECN'S	BY	
A	C028	BA	ASSEMBLY, PRINTED CIRCUIT BOARD, CARD READER
B	1621	WM	
C	D097	WP	DRAWN BY: G.L. RADER; DATE: 10-15-80; NUMBER: 0012-20-9001
D			
E			APP'D: [illegible] 1 5 81

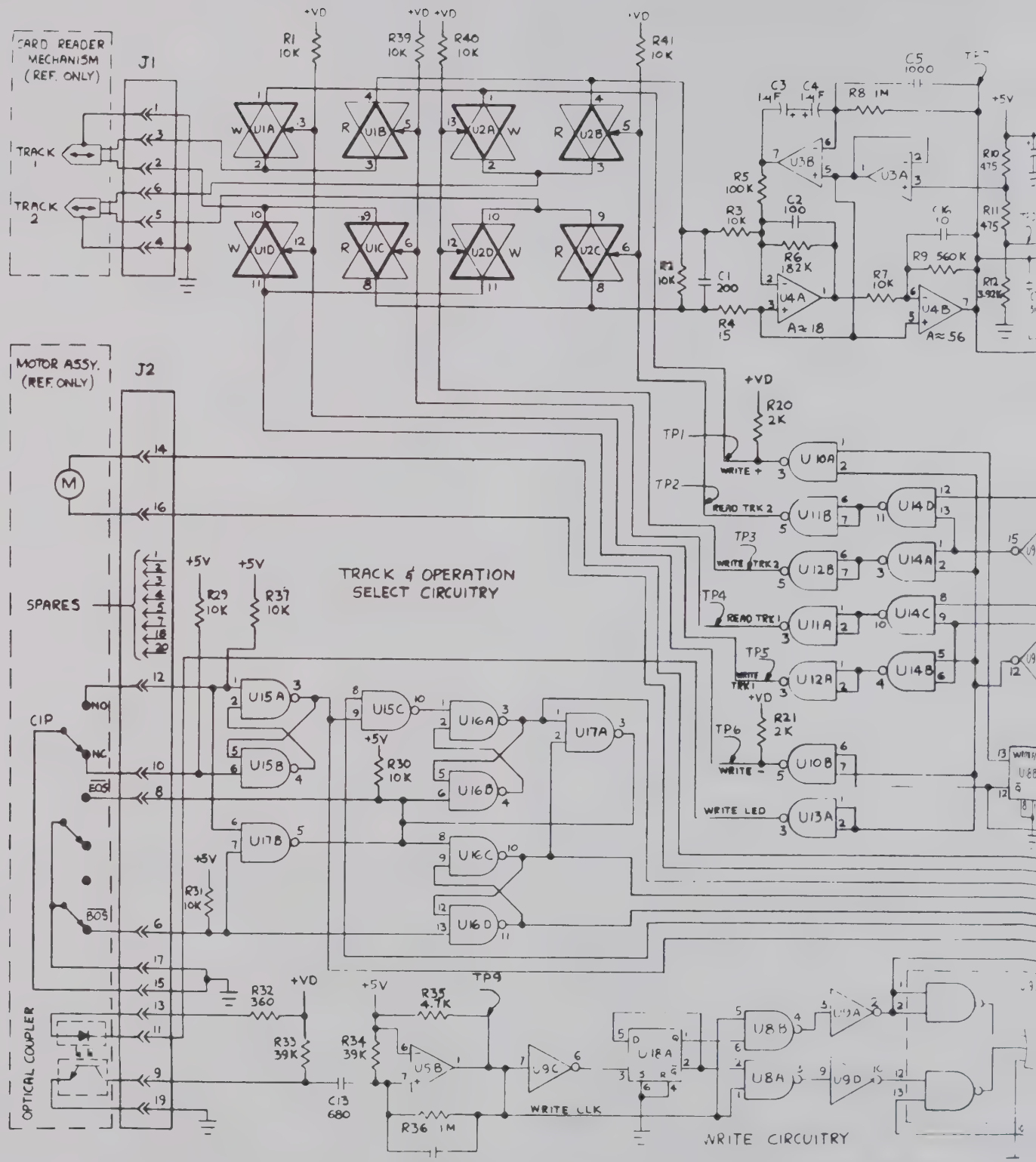

IC INFORMATION

IC NO	+VD(12V SW)	+5V	GND	DESCRIPTION	UNUSED GATES	IC NO	+VD(12V SW)	+5V	GND	DESCRIPTION	UNUSED GATES
U1, 2	14		7	MC14C66BCN		U 8		14	7	MC14C13B	
U3, 4	8		4	CA3240AE		U 9		14	7	CD4C25BE	B
U5	3		12	CA339G		U 2C				CD 4C49 AE	
U6, 8, 14, 15, 16		14	7	MC14C11B		U 21	14		7	CD 4C23 BE	C
U7		16	8	MC 14538B							
U9		1	8	CD 4049 AF							
U10, 11, 12, 13, 17, 22		8	4	CD 4C BE	U13B						

REF DESIG	
LAST USED	NOT USED
C17	
CR2	
J?	
Q4	
K41	
TP15	
U22	

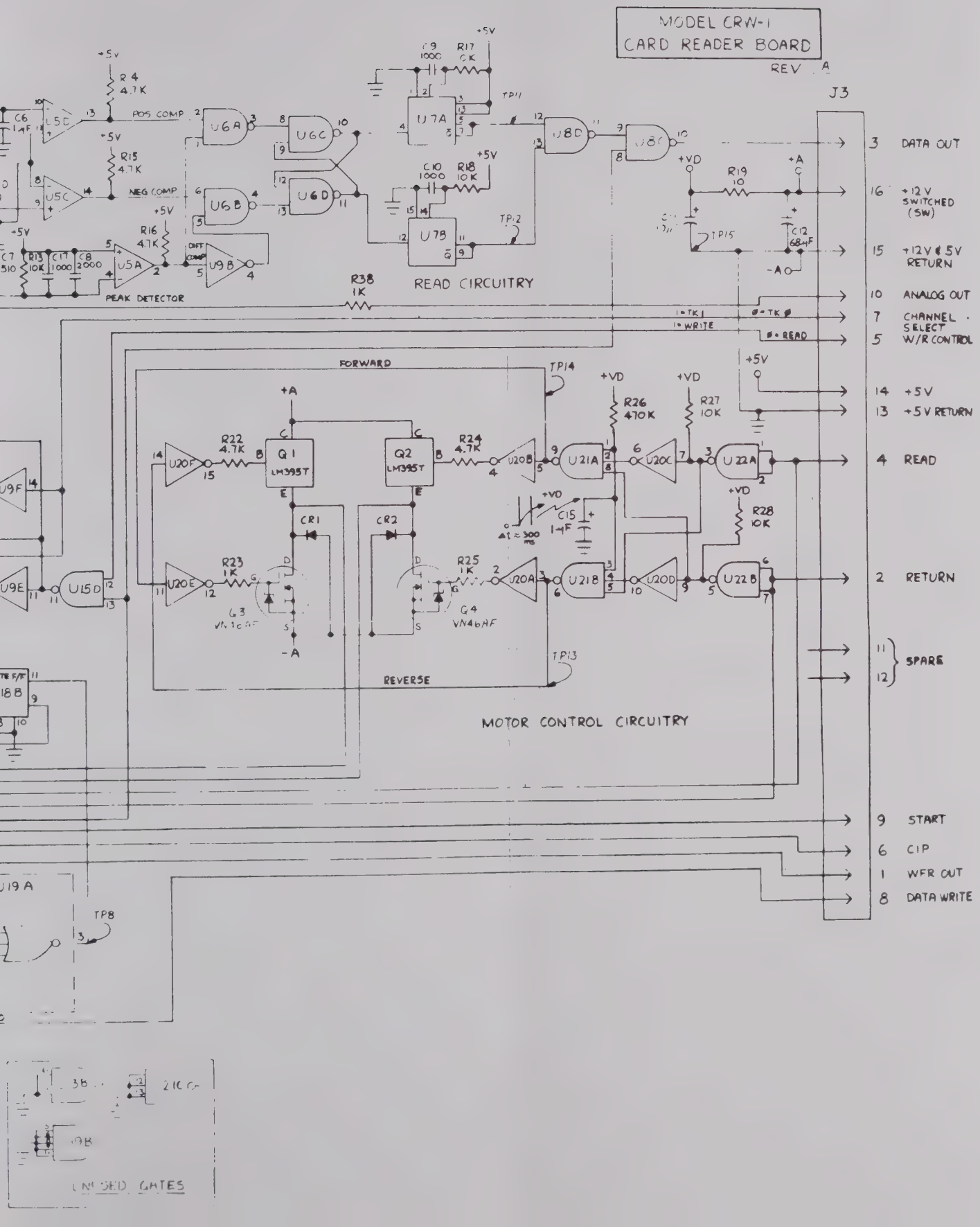
MODEL CRW-1
CARD READER BOARD
REV A
J3
3 DATA OUT
16 +12 V SWITCHED (SW)
15 +12V & 5V RETURN
10 ANALOG OUT
7 CHANNEL SELECT
5 W/R CONTROL
14 +5V
13 +5V RETURN
4 READ
2 RETURN
11 SPARE
12 SPARE
9 START
6 CIP
1 WFR OUT
8 DATA WRITE
READ CIRCUITRY
PEAK DETECTOR
MOTOR CONTROL CIRCUITRY
FORWARD
REVERSE
1=TK1
0=TK0
1=WRITE
0=READ
+5V
+VD
+A
-A
R4 4.7K
R15 4.7K
R16 4.7K
R17 6K
R18 10K
R19 10
R22 4.7K
R23 1K
R24 4.7K
R25 1K
R26 470K
R27 10K
R28 10K
R38 1K
C9 1000
C10 1000
C12 68µF
C15 1µF
CR1
CR2
Q1 LM395T
Q2 LM395T
Q3 VN10AF
Q4 VN46AF
U5C
U6A
U6B
U6C
U6D
U7A
U7B
U8D
U9B
U15D
U20A
U20B
U20C
U20D
U20E
U20F
U21A
U21B
U22A
U22B
TP2
TP8
TP11
TP13
TP14
TP15
UNUSED GATES

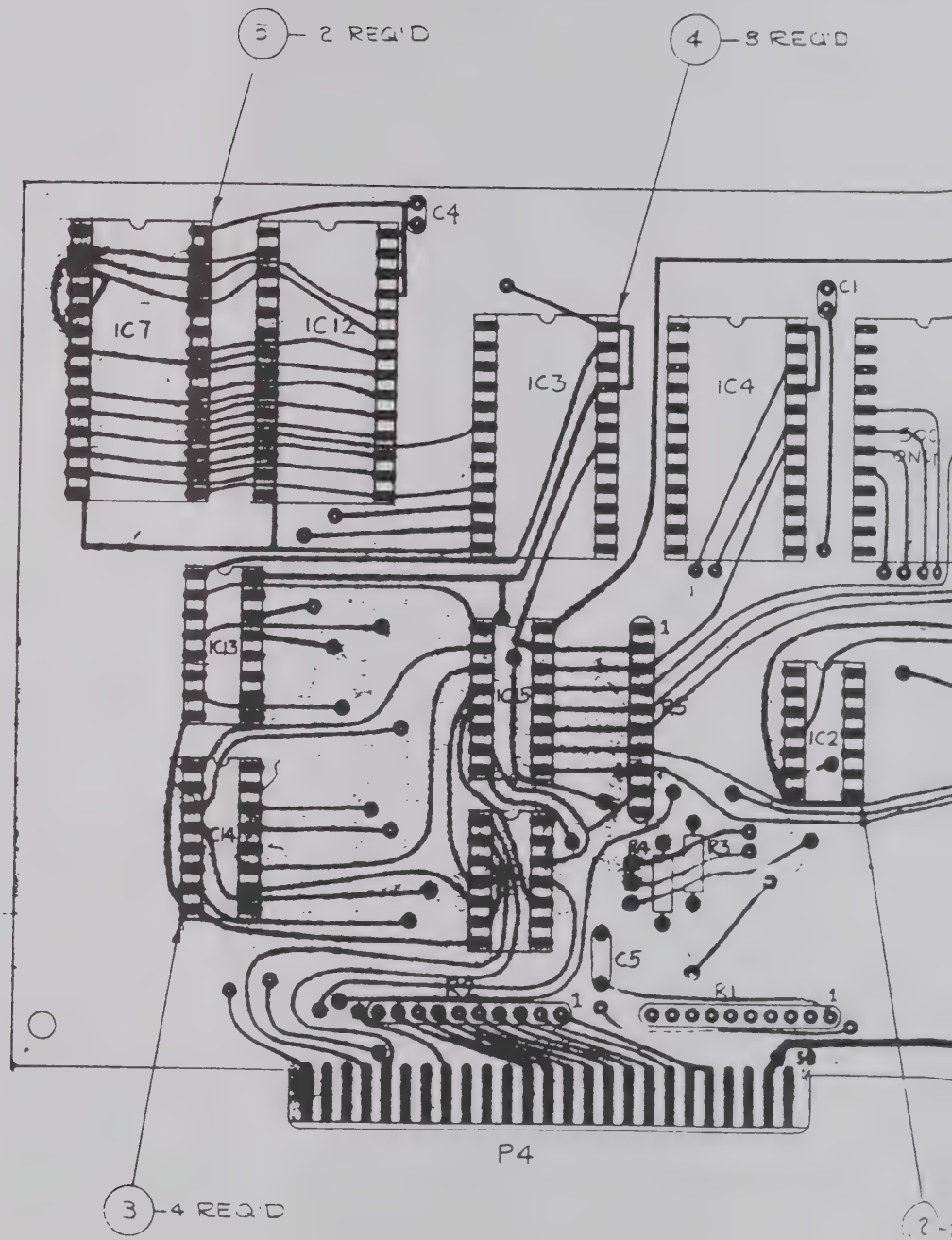

NOTES:

1. FOR PARTS LIST SEE 1110-40-9010
2. SCALE 2:1
3. CENTER [illegible] WITH DOT ON BOARD AND MOUNT WITH HOT MELT GLUE.

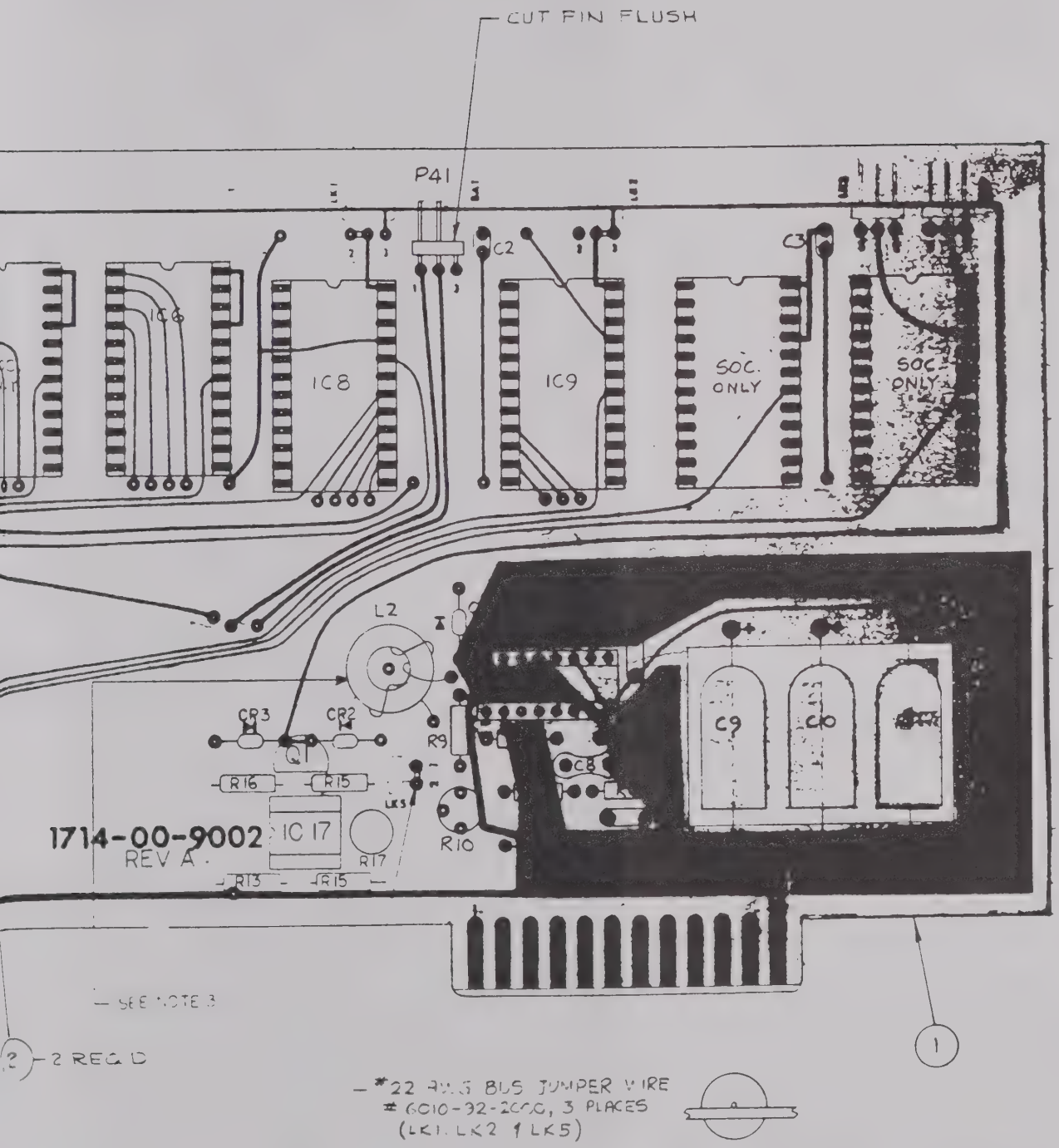

REVISIONS			WAVETEK
	ECN'S	BY	ASSY. DWG. P.C. BOARD
A	D 008	DLR	STACKER/AVERAGER/[illegible]
B			
C			DRAWN BY / DATE
D			N. GAY / 2-9-82
E			APP'D / [illegible]

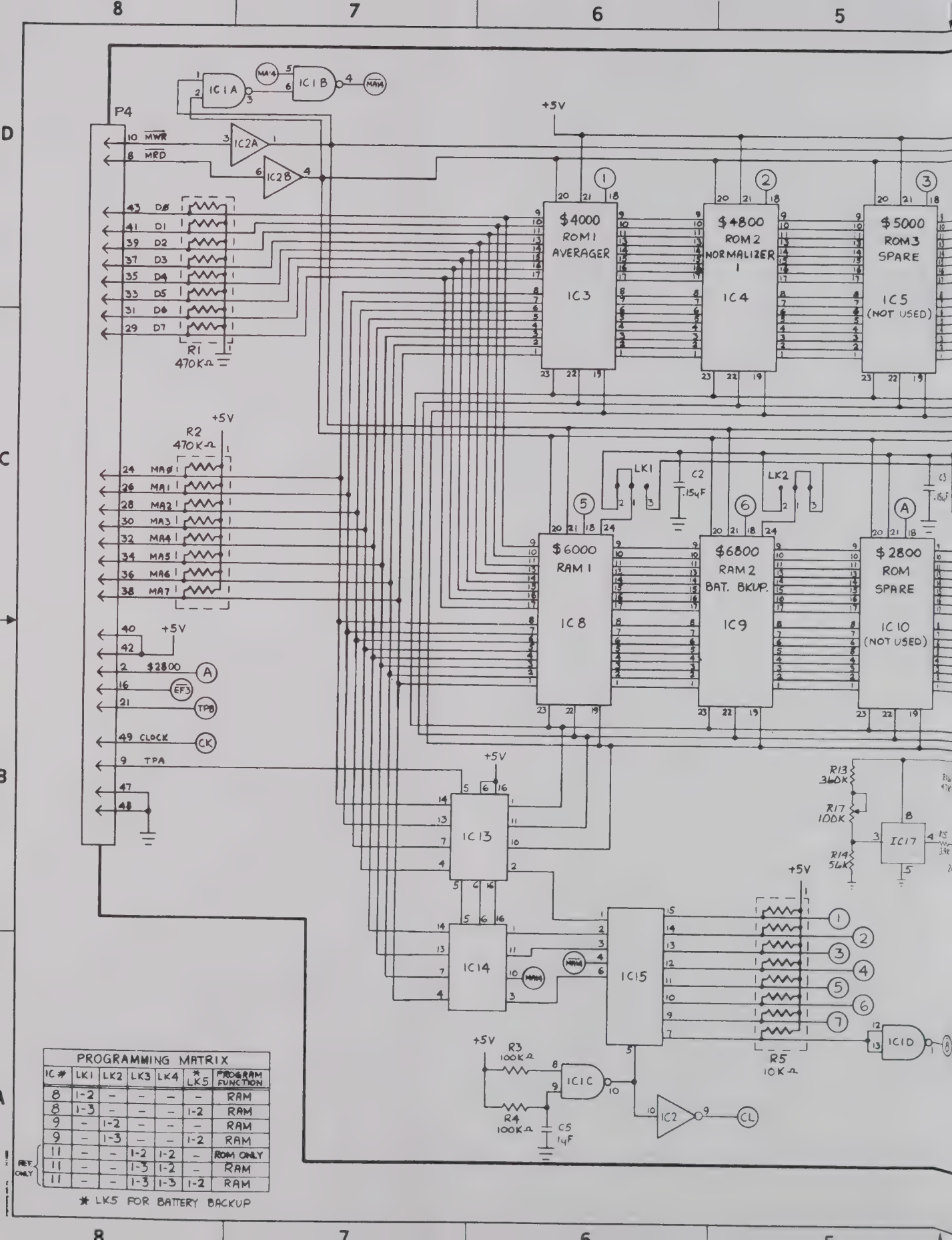

PROGRAMMING MATRIX						
IC #	LK1	LK2	LK3	LK4	* LK5	PROGRAM FUNCTION
8	1-2	–	–	–	–	RAM
8	1-3	–	–	–	1-2	RAM
9	–	1-2	–	–	–	RAM
9	–	1-3	–	–	1-2	RAM
11	–	–	1-2	1-2	–	ROM ONLY
11	–	–	1-3	1-2	–	RAM
11	–	–	1-3	1-3	1-2	RAM

REF. ONLY

* LK5 FOR BATTERY BACKUP

REVISIONS				
ZONE	LTR	DESCRIPTION	DATE	APPROVED
	–	RELEASED TO PROD. ERN C024	5-28-82	
	A	D-008 ADD BATTERY SENSING	9-2-82	D.J.W.
	B	D-036 ROM LOADING	2 18 83	DLR
B-7	C	D-043 SCH CHANGE	3 31 83	DLR
C3	D	ECN D-087 ADDED PIN 25&24	10-31-83	W.P.

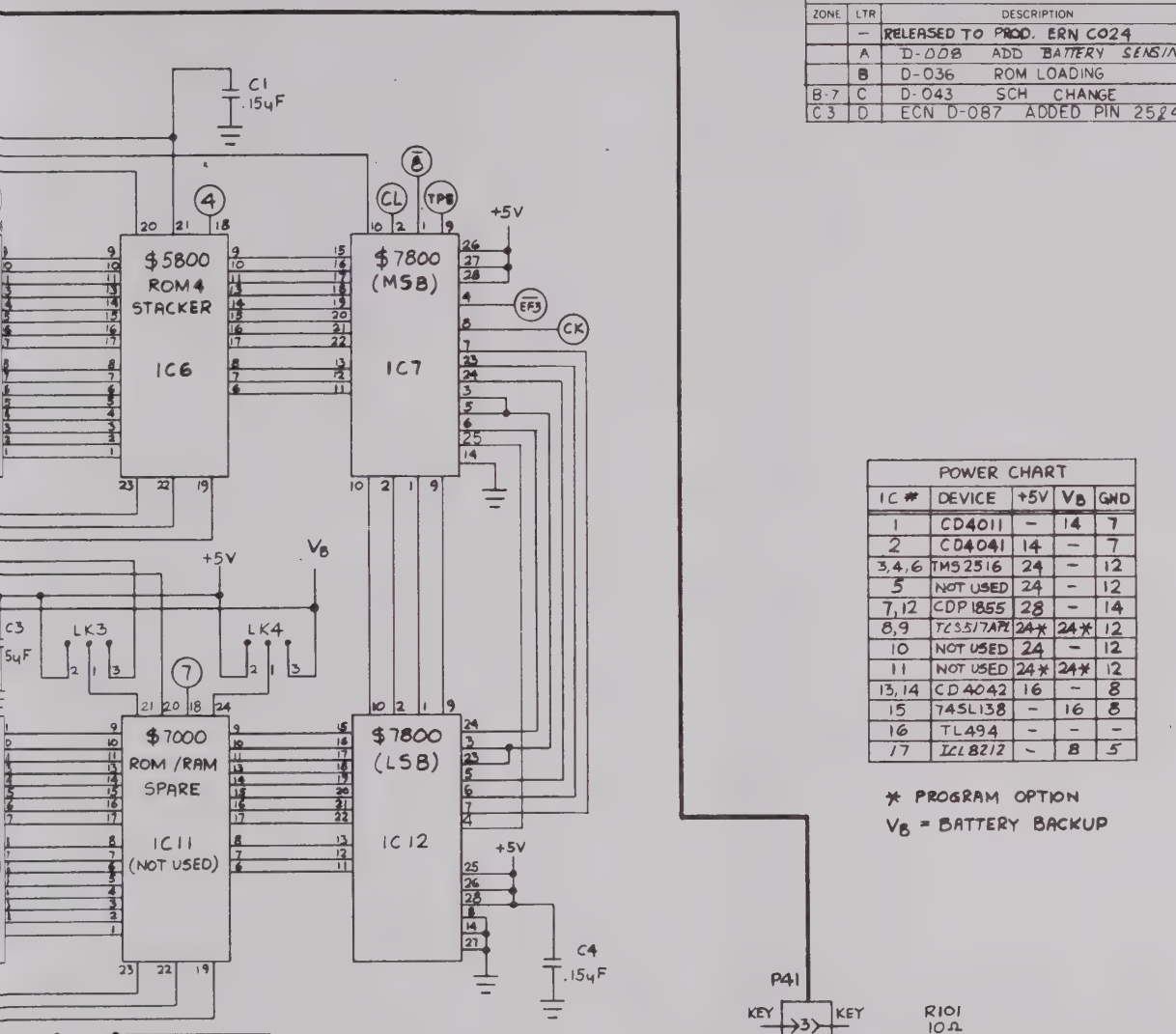

POWER CHART				
IC #	DEVICE	+5V	VB	GND
1	CD4011	–	14	7
2	CD4041	14	–	7
3,4,6	TMS2516	24	–	12
5	NOT USED	24	–	12
7,12	CDP1855	28	–	14
8,9	TC5517APL	24*	24*	12
10	NOT USED	24	–	12
11	NOT USED	24*	24*	12
13,14	CD4042	16	–	8
15	74SL138	–	16	8
16	TL494	–	–	–
17	ICL8212	–	8	5

* PROGRAM OPTION
VB = BATTERY BACKUP

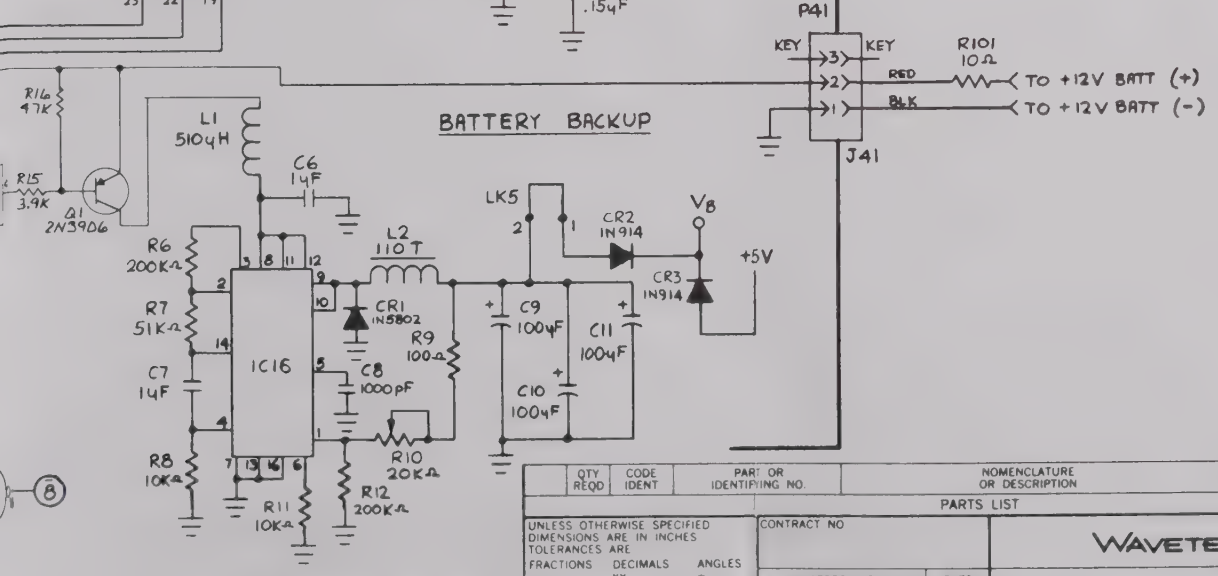

QTY REQD	CODE IDENT	PART OR IDENTIFYING NO.	NOMENCLATURE OR DESCRIPTION

PARTS LIST

UNLESS OTHERWISE SPECIFIED DIMENSIONS ARE IN INCHES
TOLERANCES ARE
FRACTIONS ± — DECIMALS XX ± — XXX ± — ANGLES ± —

MATERIAL —

FINISH —

DO NOT SCALE DRAWING

CONTRACT NO

APPROVALS	DATE
DRAWN G.L. RADER	3-16-82
CHECKED	5-28-82

1110-40-9010	ME-1
NEXT ASSY	USED ON
APPLICATION	

WAVETEK INDIANA, INC

SCHEMATIC DIAGRAM, STACKER/AVERAGER/NORMALIZER PCB

SIZE	CODE IDENT NO	DRAWING NO
D	34280	0414-30-9008

SCALE — SHEET 1 OF 1

ASSEMBLY INSTRUCTIONS TO ADD ME-3, DBUV TO 1865-1 UNIT

1. REMOVE SCREWS THAT ATTACH FRONT PANEL OF CHASSIS ASSEMBLY TO CASE. REMOVE CHASSIS ASSEMBLY FROM CASE.
2. REMOVE TOP COVER FROM CHASSIS.
3. REMOVE MICROPROCESSOR (μP) CARD (Z501) FROM UNIT (5th CARD POSITION
4. REMOVE (1) PROM (IC 315) & RETURN TO STOCK PER DELETION LIST 0415-00-
5. ADD (2) EPROMS (IC 307 & IC 308) AT LOCATIONS SHOWN. SEE FIG. 1
6. REPLACE μP CARD IN ITS ORIGINAL POSITION.
7. ATTACH (2) CARD GUIDES (ITEM #3) IN 3rd CARD POSITION AS SHOWN.
8. INSERT SAN/LITH BATT PCB (ITEM # 1) INTO CARD GUIDES AS SH
9. ATTACH LABEL (ITEM #4) DIRECTLY BELOW & CENTERED ON EXISTING SERIAL NO. PLATE AT REAR OF CHASSIS.
10. REPLACE CHASSIS COVER, SECURE SCREWS & REINSTALL CHASSIS IN CA
11. ATTACH SECOND LABEL (ITEM #4) DIRECTLY BELOW & CENTERED ON EXISTING MODEL/SERIAL NO. PLATE AT REAR OF CASE.

NIT

CASE.

ITION FROM FRONT).

-00-9001. SEE FIG. 1.

IG. 1.

HOWN.

AS SHOWN.

STING MODEL/

N CASE.

ON

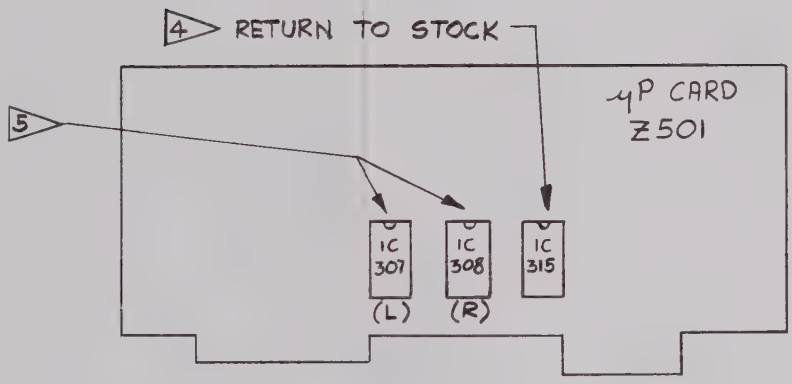

FIGURE 1

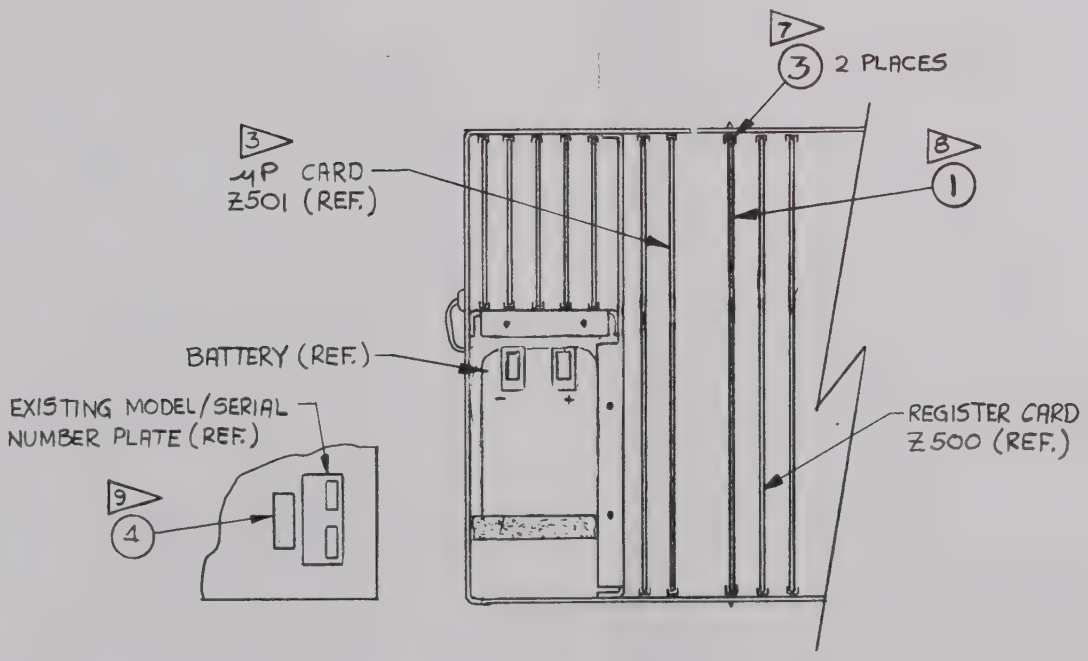

FIGURE 2

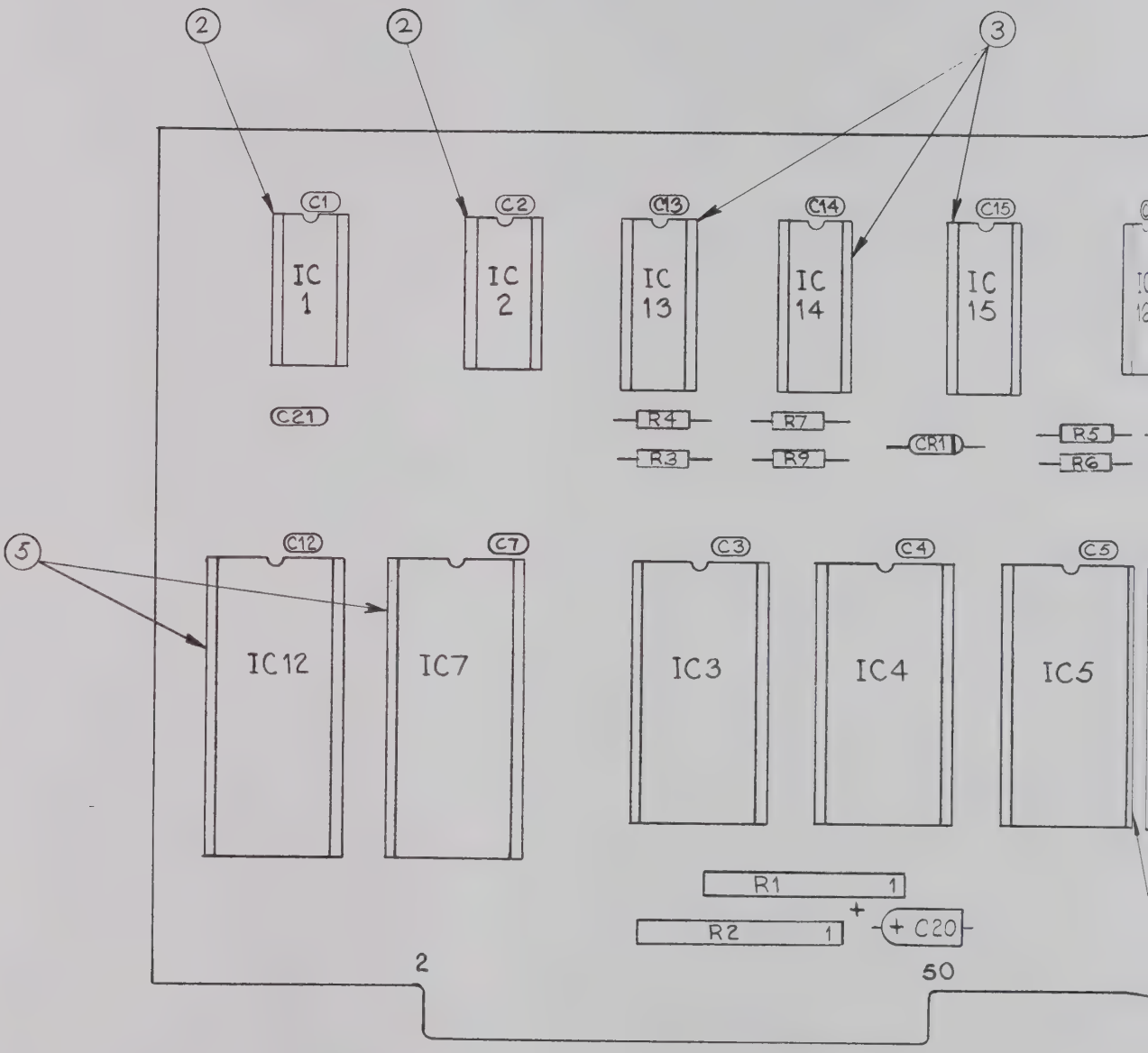

NOTES:

1. BATTERY TO BE SOLDERED ON COMPONENT SIDE OF BOARD.
2. DO NOT INSTALL ITEM J1 UNTIL TEST.

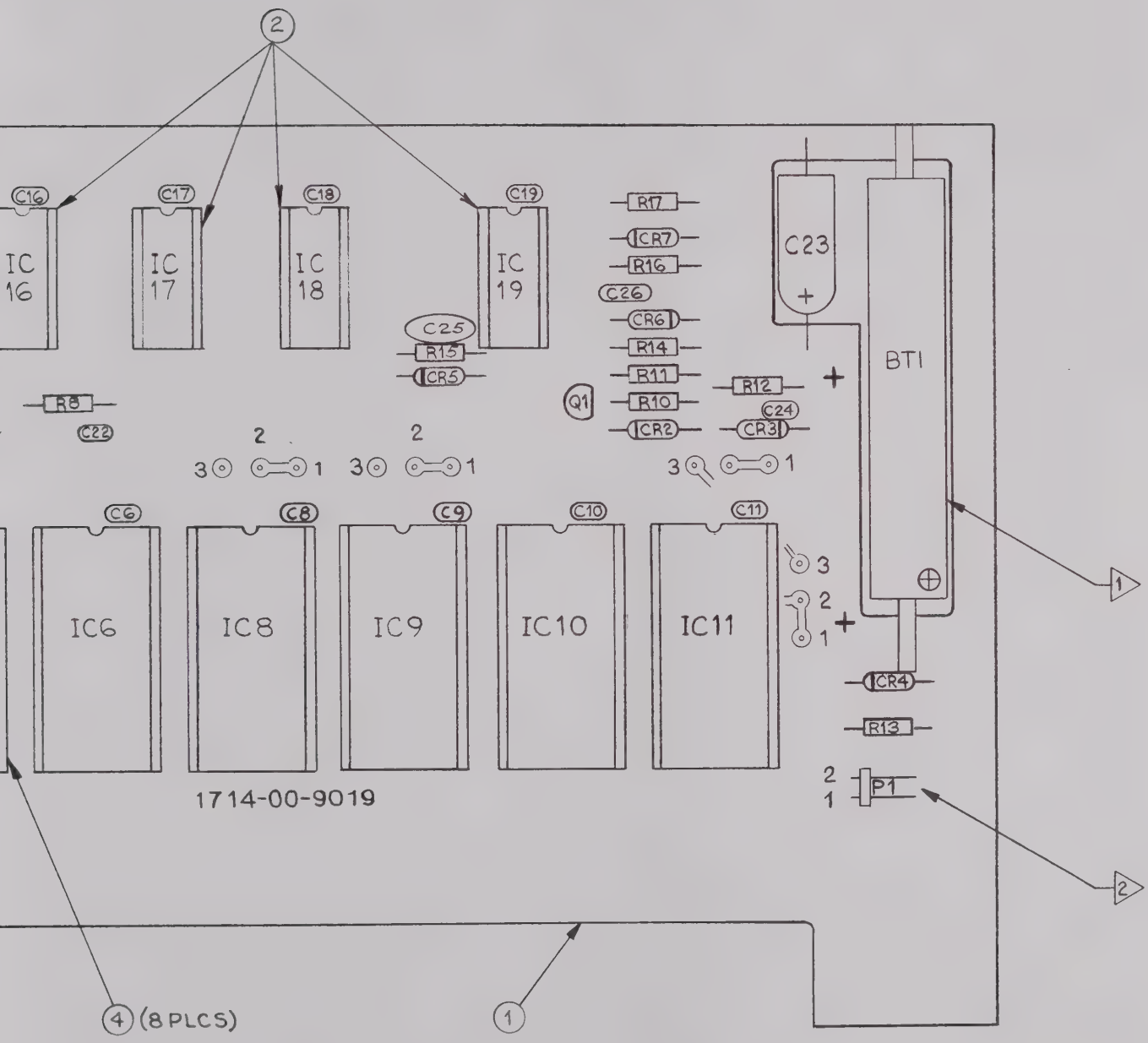
2
C16
C17
C18
C19
IC 16
IC 17
IC 18
IC 19
C25
R15
CR5
R17
CR7
R16
C26
CR6
R14
R11
R10
CR2
Q1
R12
C24
CR3
C23
BTI
R8
C22
2
3
1
C6
C8
C9
C10
C11
IC6
IC8
IC9
IC10
IC11
CR4
R13
P1
1714-00-9019
1
2
4 (8 PLCS)

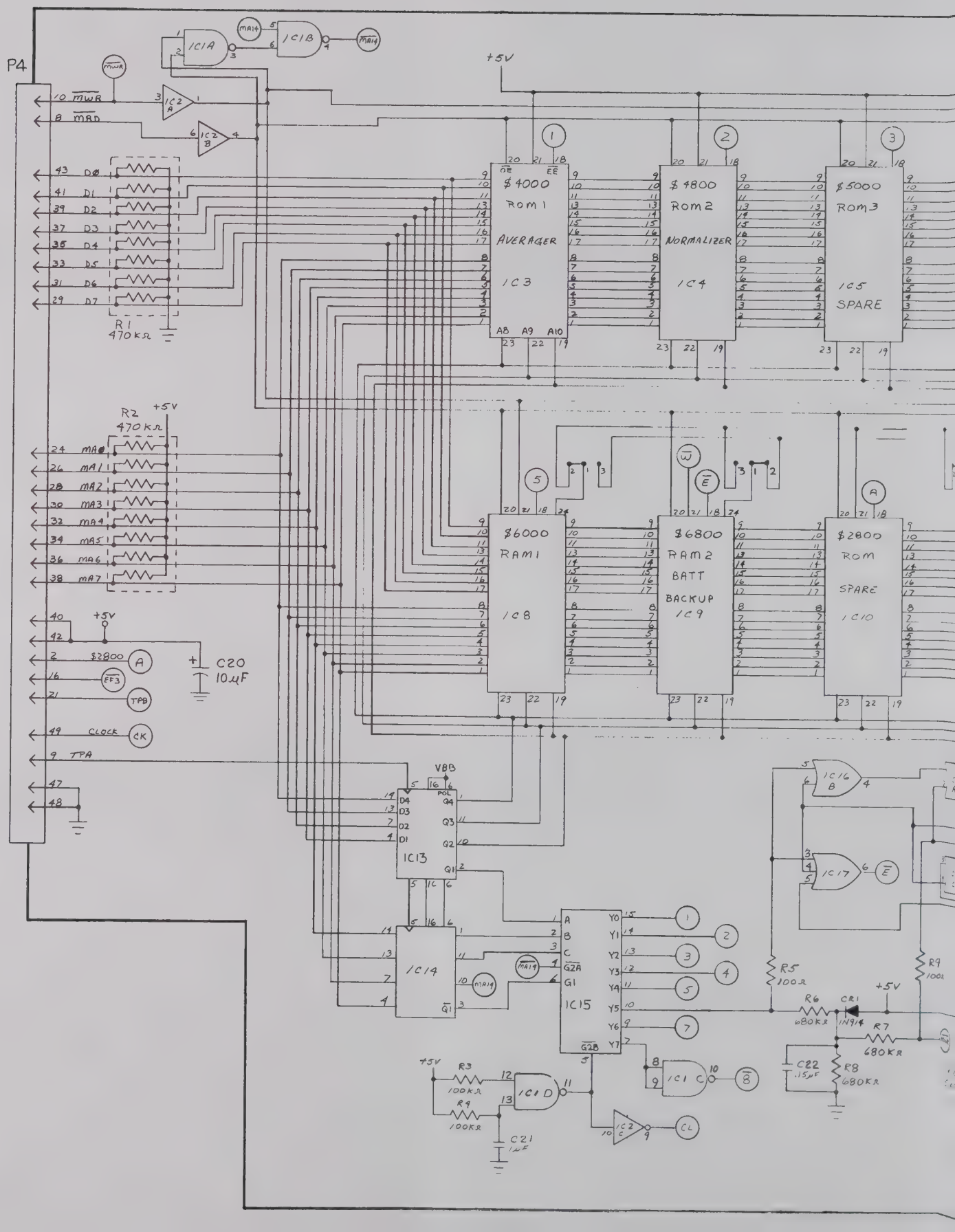
P4
IC1A
IC1B
MA14
MWR
MRD
IC2 A
IC2 B
+5V
D0
D1
D2
D3
D4
D5
D6
D7
R1
470KΩ
R2
470KΩ
MA0
MA1
MA2
MA3
MA4
MA5
MA6
MA7
$4000
ROM 1
AVERAGER
IC3
$4800
ROM 2
NORMALIZER
IC4
$5000
ROM 3
IC5
SPARE
$6000
RAM 1
IC8
$6800
RAM 2
BATT
BACKUP
IC9
$2800
ROM
SPARE
IC10
$2800
EF3
TPB
CLOCK
TPA
C20
10μF
VBB
IC13
IC14
IC15
IC16 B
IC17
R5
100Ω
R6
680KΩ
CR1
1N914
R7
680KΩ
R8
680KΩ
R9
100Ω
C22
.15μF
R3
100KΩ
R4
100KΩ
C21
1μF
IC1 C
IC1 D
IC2 C

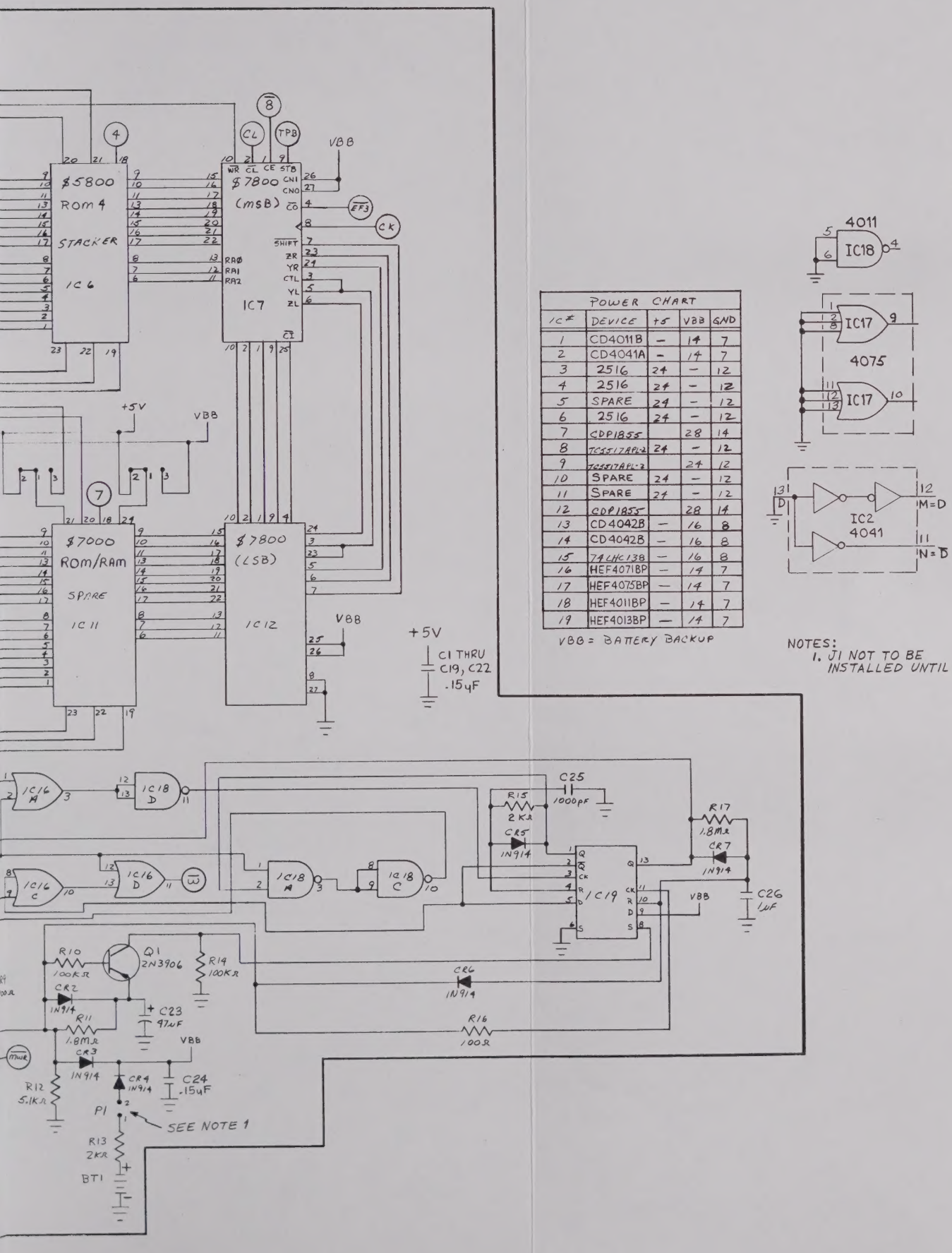

POWER CHART				
IC #	DEVICE	+5	VBB	GND
1	CD4011B	—	14	7
2	CD4041A	—	14	7
3	2516	24	—	12
4	2516	24	—	12
5	SPARE	24	—	12
6	2516	24	—	12
7	CDP1855		28	14
8	TC5517APL-2	24	—	12
9	TC5517APL-2		24	12
10	SPARE	24	—	12
11	SPARE	24	—	12
12	CDP1855		28	14
13	CD4042B	—	16	8
14	CD4042B	—	16	8
15	74LHC138	—	16	8
16	HEF4071BP	—	14	7
17	HEF4075BP	—	14	7
18	HEF4011BP	—	14	7
19	HEF4013BP	—	14	7

VBB = BATTERY BACKUP

NOTES:
1. J1 NOT TO BE INSTALLED UNTIL TEST

MP MASTER
MA31822